S1101 Series RF Signal Generator

User Manual

Saluki Technology Inc.

The manual applies to the RF signal generator of the following models:

- S1101A RF Signal Analyzer (250kHz - 6GHz).
- S1101B RF Signal Analyzer (250kHz - 3GHz).

Standard Accessories of S1101 RF signal generator

Item	Name	Qty
1	Main Machine	1 Set
2	Power Cord	1 pcs
3	User Manual	1 pcs

Options of the S1101 RF signal generator

Option Number	Item	Function
S1101-01	115Db Programmable Step Attenuator	Expand the output power range.
S1101-02	Vector Modulation Function	Vector signal generator, need option 003.
S1101-03	Baseband signal generator	Baseband generator, need option 002.
S1101-05	Carrying Case	Protect the instrument during transportation.
S1101-06	Rack Installation Kit	For rack installation.

Preface

Thanks for choosing S1101 Series RF signal generator produced by Saluki Technology Inc. Please read this manual carefully for your convenience.

Manual No.

S1101-03-02

Version

Rev01 2017.02 Saluki Technology

Manual Authorization

The information contained in this Manual is subject to change without notice. The power to interpret the contents of and terms used in this Manual rests with Saluki.

Product Quality Assurance

The warranty period of the product is 36 months from the date of delivery.

Product Quality Certificate

The product meets the indicator requirements of the manual at the time of delivery. Calibration and measurement are completed by the measuring organization with qualifications specified by the state, and relevant data are provided for reference.

Quality/Environment Management

Research, development, manufacturing and testing of the product comply with the requirements of the quality and environmental management system.

Precautions

Warning

"Warning" indicates danger. It reminds the user to pay attention to a certain operation process, operation method or similar situations. Noncompliance with the rules or improper operation may result in personal injuries. You must fully understand the warning and all the conditions in it shall be met before the next step

Attention

"Attention" indicates important prompts and no danger. It reminds the user to pay attention to a certain operation process, operation method or similar situations. Noncompliance with the rules or improper operation may result in damage to the instrument or loss of important data. You must fully understand the caution and all the conditions in it shall be met before the next step.

Contacts

Service Tel:	886.2.2175 2930
Website:	www.salukitec.com
Email:	info@salukitec.com
Address:	No. 367 Fuxing N Road, Taipei 105， Taiwan (R.O.C.)

Content

1 Overview

S1101 Radio Frequency Signal Generator is a multipurpose signal source with high cost performance developed by the Saluki Technology based on available mature technology through optimal combination. It has the following features in respect of technology and performance:

- High precision, high purity and wide range of output level;
- With list sweep and step sweep functions;
- With analog modulation, digital modulation and vector modulation functions;
- Supporting GP-IB communication and in compliance with SCPI requirements;
- Supporting RS-232 communication with smart update of software;
- Available in perfect self-test and self-calibration functions by software in combination with hardware;
- Supporting pulse, amplitude, frequency and phase modulations, digital modulation and combined modulation, providing internal modulation signal and I/O baseband signal output.

Figure 1-1 S1101 Radio Frequency Signal Generator

This manual contains following contents:

Chapter 1 briefly introduces some basic information of S1101 Radio Frequency Signal Generator, including some advanced techniques it used; all available or possible functions; and describes this manual in outline.

Chapters 2 through to 5 are about operating instructions: including how to open and check a new radio frequency signal generator, precautions for use and routine maintenance method of RF Signal Generator; description of connectors on front and rear panel; basic operating methods of S1101 RF Signal Generator. The primary operation guide that caters to the users who are not familiar with S1101 RF Signal Generator narrates some basic usage thereof, such as how to set continuous wave, power, modulation, etc. The senior operation guide that caters to the users who have had some elementary knowledge about how to use S1101 RF Signal Generator but lack adequate intimate knowledge of some special usage introduces the setup method of frequency sweep and list frequency sweep, etc.; and the functions of all the softkey menus and hardkey menus on the front panel of S1101 RF Signal Generator that are arranged by their categories for user's easy search.

Chapter 6, 7 and appendix A are about technical instructions: that describe the hardware architecture and key technology of S1101 RF Signal Generator in detail; giving the main technical specifications.

Chapter 8 is about maintenance instructions: including the troubleshooting procedure and error message description; and also how to return the generator for service.

We sincerely hope that our products will bring convenience and efficiency to your work. If there is any problem in use, welcome to contact us.

2 Brief Instruction

2.1 Unpacking

2.1.1 Model Confirmation

After opening the packing box, you will see the following items:

- S1101 Radio Frequency Signal Generator x 1
- Three-wire Power Cord x 1
- User Manual x 1
- Packing List x 1

Please check the above items against the Purchase Contract and the Packing List. If any problem, please contact Saluki and we will deal with the problem as soon as possible.

Attention

Since the instrument and packing box are very heavy, please join force with another person to handle with care.

2.1.2 Appearance Inspection

Inspect carefully whether the instrument has any damage during transportation. If the instrument has obvious damage, it is strictly forbidden to be powered on. Please contact Saluki and we will repair or exchange it be as soon as possible.

2.1.3 Operating Environment

Refer to the part of environment adaptability in the technical specifications of appendix 1. In addition, pay special attention to the following requirements:

Power supply: 220V (±10%), 50Hz (±5%), 200W

Power socket: a three-wire supply socket that must be grounded reliably.

Instrument power cord: packed three-wire power cord

Power fuse: quick fuse with 20mm length, 5mm dia, 3A rated current and 250V rated voltage

Warning

Before connecting the signal generator with the power supply, please carefully verify if the power supply voltage and the power fuse of the instrument are normal. Otherwise, it is much possible to damage the instrument or even cause personal injuries.

Warning

To prevent or reduce the possible damage to the internal hardware of the signal generator due to the mutual interference caused by several sets of equipment through the power supply, especially the peak pulse interference caused by high-power equipment, it is best to use a 220V AC stabilized-voltage power supply to supply power for the signal generator.

Warning

Bad grounding or failure of the power supply may cause damage to the instrument, even personal injury. Before connecting the power supply of signal generator, make sure ground wires of the instrument and its power supply are in good contact.

Use a power socket with protective grounding and do not substitute the protective ground wire with an external cable.

2.1.4 Electrostatic Protection

ESD can damage or destroy electronic components and equipment. Antistatic measures are usually taken to prevent ESD damage: conductive table–mat and wrist–strap combination as well as conductive floor–mat and heel–strap combination. Both types, when used together, provide a significant level of ESD protection. Among the two, only the table–mat and wrist–strap combination provides adequate ESD protection when used alone. To ensure user safety, the static–safe accessories must provide at least 1 MΩ resistance to ground.

Please use the following antistatic measures correctly to reduce the damage of electrostatics:

Ensure all the instruments are grounded correctly to prevent the electrostatics being generated.

Before touch the joint and core wire or do any assembly operation, do wear antistatic wrists or take other antistatic measures.

Warning

The above antistatic measures shall not be taken where the voltage is larger than 500V.

2.1.5 10MHz Timebase and Warming up

To make the 10MHz timebase of the S1101 Radio Frequency Signal Generator working in a stable operating temperature, please do not turn off RF Signal Generator during use. The instrument requires some minutes to warm up from a cold start and 2 hours for specification test.

Attention

To ensure the 10MHz internal timebase aging rate of the RF Signal Generator, the RF signal generator must not be powered off. If not, it requires 7 days of continuous warm-up to reach the specified aging rate specification.

2.2 User's Check

Attention

In the following statements, the descriptive forms of hardkey and softkey input on the front panel are:

Hardkey:【XXX】, XXX is a hardkey name.

Softkey: [XXX], XXX is a softkey name.

If the latter includes multiple states, the active state is placed within brackets, for example:

[SwpTime Man Auto] (Man) indicates the sweep time - manual is active.

2.2.1 Preliminary Check

Power on the S1101 Radio Frequency Signal Generator and observe the yellow "Standby" power indicator on the front panel lights up, which indicates the standby power works normally. Put the power switch on the front panel to "ON" and observe the green power indicator on the front panel lights up, the backlight of the display lights up and retains about 30 seconds, then the start-up (or reset) screen is displayed.

After warming up for 10 minutes, set the signal generator as follows:

- Press【Reset】key.
- The RF signal generator restarts.
- There should be no any alarms.

2.2.2 Further Check

1) Start and warm up the signal generator for at least 10 minutes. Apply matched load to the RF output port.
2) Set the signal generator as follows:

   【Power】 7 【dBm】

   【Freq】 100 【MHz】
3) Press the key【RF On Off】of the signal generator to turn on signal generator output.
4) Use the navigation keys to set signal generator frequency to step up at 100MHz intervals until the max frequency. Observe the display alarm instruction area. There should be no alarms.
5) Set the signal generator.

   【Power】 -135 【dBm】
6) Observe the display alarm instruction area. There should be no alarm instruction.

2.3 Routine Maintenance

2.3.1 Regularly Clean Instrument Screen:

It is required to clean the screen after a period of use. Please proceed as the following procedures:

1) Shut down.
2) Unplug the power cord.
3) Use a clean and soft cloth with detergent to wipe the display panel gently.
4) Wipe up the display with a clean and soft cloth.
5) Plug in the power cord after the display is dried out.

Attention

There is a layer of Anti Static Coatings (ASC) applied on the surface of the display screen, so never use the cleaner containing fluoride, acidic cleaner or alkali cleaner. Never spray cleaner over the display panel, otherwise the cleaner may seep into and damage the instrument.

2.3.2 Fuse

With ratings printed on the power jack on the rear panel, the fuse is a quick-acting fuse with 20mm length, 5mm dia., 3A rated current and 250V rated voltage. If it is required to replace the fuse, please proceed as the following procedures:

1) Shut down.
2) Unplug the power cord.
3) Screw out the fuse holder.
4) Replace the fuse holder.
5) Remount the fuse holder.
6) Plug in the power cord.

Warning

Please use the fuse of the same model and parameters (250V/F3A) for replacement to avoid fire!

It is strictly prohibited to use the fuse of other materials or models!

3 Front and Rear Panels

3.1 Front Panel

There are mainly the following parts on the front panel: power switch, USB interface, softkey area, entry area, function area, reset key and RF output, etc. input/output connectors.

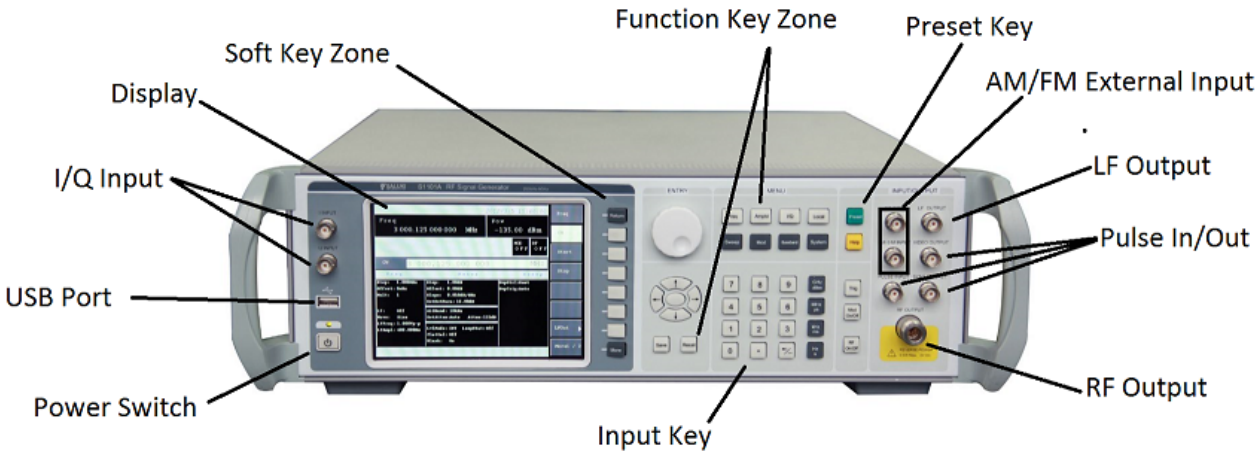

Figure 3-1: Front Panel

1) Power Switch

When the green indicator lights up, it indicates the instrument is in “ON” state; when the yellow indicator lights up, it indicates the instrument is in “Standby” state.

2) USB Interface

It is used to update system software and back up data, etc.

3) Display Area

The display area has the following functions when the instrument is executing different functions: display the current state of the instrument, e.g. step frequency sweep, continuous wave, etc; display the frequency and power of the instrument in current state; display the data just entered when it is necessary to enter frequency, power, etc. data; display the current working time; display the current state parameters when the system is executing a function menu; display the name of the softkey row to the right side of the display area; the background shadow under the characters corresponding to a key in the soft key row indicates that it is selected; displays other information in current state, including modulation state, reference out of lock, YO loop out of lock, LO loop out of lock, low band out of lock, sweep out of lock and ALC loop state, etc.

4) Softkey Area

The softkey is used to activate the function displayed in the left side of each key. A lighted softkey indicates it is selected.

5) Entry Area

The entry area includes navigation keys, knob, unit keypad, ←/– (backspace/minus) and numeric keypad. All entries can be changed by the keys and knob in the entry area.

Navigation keys: direction arrow keys are used to increase or decrease a numerical value, and sometimes used to select the desired parameter in list. Generally, the left/right arrows are used to select the position of marker, Up/Down arrows are used to change the digit of marker position in a step of 1, or change the digit by the step set if no marker displayed.

Knob: used to increase or decrease a value, change the displayed significant digit or character, or pass through the list step by

step or select a parameter in a line.

Unit Keypad: used to set the unit of a numerical value after it is entered.

Minus/Backspace key: If a numerical value is being entered, this key is used to cancel the last entered datum. In other cases, a minus symbol will be entered by this key.

Numeric Keypad: used for enter a number, after that the keypad must be pressed to confirm the entry.

6) Function Area

It respectively executes the functions of frequency, power, sweep, modulation, save, recall, local, system, help, Mod On/Off, RF On/Off, etc. of the instrument.

In which, pressing the【Mod On Off】key can turn on/off the activated modulation mode (amplitude modulation, frequency modulation, phase modulation, pulse modulation or I/Q). When the display area displays Mod On, then it indicates the modulation has been turned on; when the display area displays Mod Off, then it indicates the modulation has been turned off.

Pressing the【RF On Off】key can turn on/off radio frequency output. If it is pressed, when the display area displays RF On, then it indicates the radio frequency has been turned on; when the display area displays RF Off, then it indicates the radio frequency has been turned off.

7) Reset Key

It executes reset function.

8) RF Output

It uses a female N-type coaxial connector. The signal generator outputs via it (or on the rear panel) and its output impedance is 50Ω.

9) EXT Input

It uses BNC female coaxial connectors that include AM input and FM/PM input through which the external modulations signals for AM, FM/PM are input.

10) LF Output

It uses BNC female coaxial connector through which LF signals at frequency of 0.01Hz~1MHz, amplitude of 40mVp~4Vp and impedance of 50Ω can be output.

11) Pulse Input/Output

It uses BNC female coaxial connectors that include pulse signal input, internal pulse supervisory signal output and internal pulse synchronizing signal output.

12) I/Q Input

It uses BNC female coaxial connectors through which externally provided I/Q signals are input.

3.2 Rear Panel

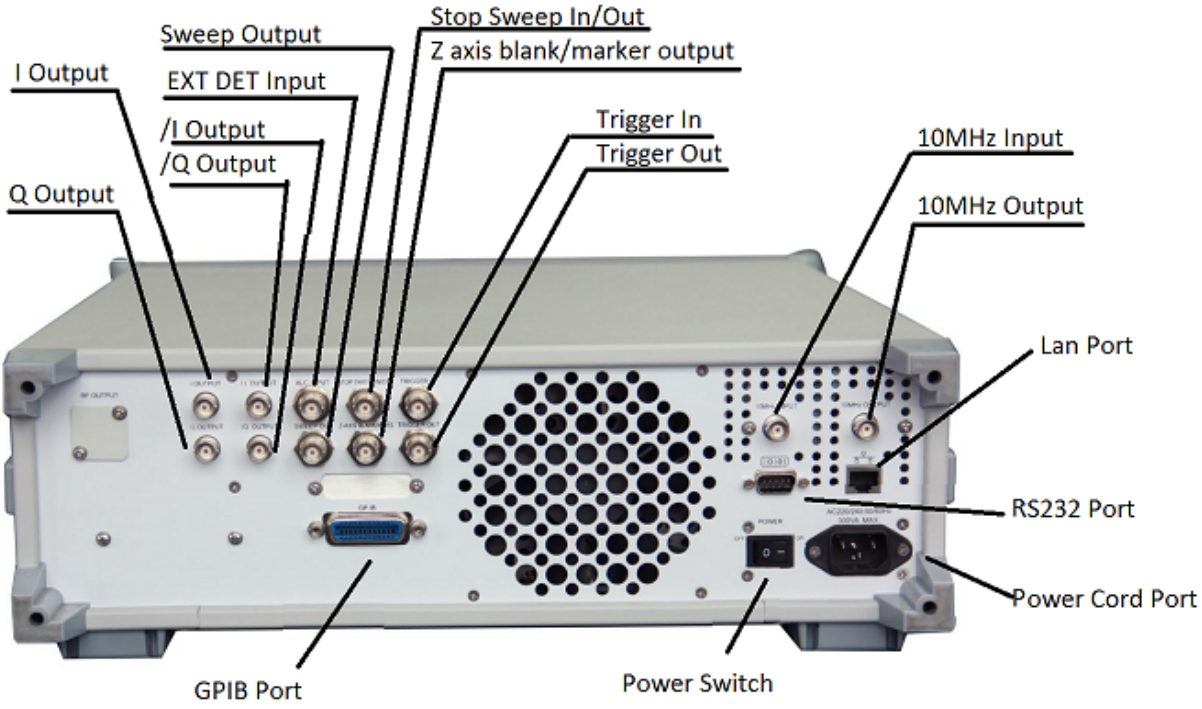

Figure 3-2 Rear Panel

1) I Out

It uses BNC female coaxial connector through which I signals used for built-in baseband generator or that are input via front panel are output. Its rated output impedance is 50 ohm DC coupled.

2) Q Out

It uses BNC female coaxial connector through which Q signals used for built-in baseband generator or that are input via front panel are output. Its rated output impedance is 50 ohm DC coupled.

3) /I Out

It uses BNC female coaxial connector through which I signals used for built-in baseband generator or that are input via front panel are inverted output. Its rated output impedance is 50 ohm DC coupled.

4) /Q Out

It uses BNC female coaxial connector through which Q signals used for built-in baseband generator or that are input via front panel are inverted output. Its rated output impedance is 50 ohm DC coupled.

5) EXT DET In

It uses BNC female coaxial connector that is used for negative-level external detecting or power meter leveling, its typical input impedance is 1kΩ and damage level is ≥+15V or ≤-15V.

6) Sweep Out

It uses BNC female coaxial connector through which the voltage in direct ratio to the sweep frequency is output. 0V corresponds to the start frequency of sweep and 10V corresponds to the stop frequency of sweep (in CW mode, 0~10V corresponds to the frequency range of whole machine). The minimum load impedance is 3kΩ, output level accuracy is ±0.25% and typical error is ±10mV.

7) Stop Sweep In/Out

It uses BNC female coaxial connector through which TTL high power level is output when the instrument is executing sweep and TTL low power level is output when it is stopping sweep, and the instrument can be forced to stop sweep if it is grounded externally, its damage level is ≥+5.5V or ≤-0.5V.

8) Z-axis Blanking/Marker Out

It uses BNC female coaxial connector through which positive pulse (about +5V with 2kΩ load) is output at RF output retrace or band switching; and negative pulses (-5V) is output when the RF output frequency is the active marker frequency.

9) Trigger In

It uses BNC female coaxial connector through which TTL signals for triggering sweep are received, TTL rising edge is effective and is used for frequency hopping in external trigger, step and list sweep modes. Its damage level is ≥+5.5V or ≤-0.5V.

10) Trigger Out

It uses BNC female coaxial connector through which 1601 1μs-width TTL low pulses are output uniformly, or 1μs-width TTL low pulses are output as corresponding to each frequency switching in step and list modes.

11) 10MHz In

It uses BNC female coaxial connector through which the frequency reference signals at 10MHz±100Hz, 0~+10dBm are received from external timebase, its typical input impedance is 50Ω and damage level is ≥+10V or ≤-5V.

12) 10MHz Out

It uses BNC female coaxial connector through which a frequency reference signal at 0dBm±3dB is provided and its typical output impedance is 50Ω. Its accuracy depends on the timebase used.

13) GP-IB Interface

It is a standard IEEE488 interface and supports SCPI language.

14) VGA Interface

It is used for connecting an external display.

15) RS232 Interface

It is used for software update and control, etc.

16) Lan

It is used for software update and control, etc.

17) Power Supply

220V (±10%), 50Hz (±5%), 300W

4 Operation Manual

This chapter introduces basic operations of RF Signal Generator, including two parts: primary operation guide and senior operation guide.

The primary operation guide that caters to the users who are not familiar with S1101 RF Signal Generator narrates some basic usage thereof, such as how to set continuous wave, power, modulation, etc.

The senior operation guide that caters to the users who have had some elementary knowledge about how to use S1101 RF Signal Generator but may need adequate intimate knowledge of some special usage introduces how to control the impact of inverse power of spectrum analyzer or mixer during measurement, how to use external amplitude leveling and how to change the reset parameters, etc.

Attention

If it is the first time you unpack a signal generator, please first go over the User Manual for S1101 Radio Frequency Signal Generator.

Attention

In the following statements, the descriptive forms of hardkey and softkey in the front panel are:

Hardkey: 【XXX】, XXX is a hardkey name.

Softkey: [XXX], XXX is a softkey name.

If the latter includes multiple states, the active state is placed within brackets, for example: [SwpTime Man Auto] (Man) indicates sweep time – manual is active.

Attention

The signal generator will start running after a short-time self-test if the 【Reset】 key on the front panel is pressed. In the following examples, all functions or operations start from pressing the 【Reset】 key unless otherwise specified.

4.2 Primary Operation Manual

4.2.1 Continuous Wave Operation

Continuous wave operation is an important function of signal generator. This operation can be achieved easily by keys on the front panel. In continuous wave mode, the signal generator outputs a low-noise synthesized frequency signal.

For example: Set continuous wave to 1.234567GHz

- Operation steps:

Press【Freq】key (here the softkey [CW] is highlighted, indicating it is selected by default)

The softkey mark menu relating to frequency setting is displayed in the area of softkey mark.

In the meanwhile, the following is displayed in the present entry display area:

CW X. X X MHz

This frequency value is the system's default or that set for last continuous wave operation.

Enter 1.234567 by the numerical keys and then press the unit key【GHz】to confirm the entry. Then the frequency value displayed in the present entry display area and main parameter display area will change to that just entered. It is also possible to change the entered frequency value by the knob and navigation keys.

4.2.2 Output Level Operation

The signal generator can provide output power operation in CW, frequency sweep and power sweep modes. The power range can cover from -20dBm to the maximum available power (the signal generator with step attenuator options can cover from -120dBm to the maximum available power).

For example: Set power level to 0dBm.

- Procedures:

Press【Power】key (here the softkey [PowLevel] is highlighted, indicating it is selected by default)

The softkey mark menu relating to frequency setting is displayed in the area of softkey mark.

In the meanwhile, the following is displayed in the present entry display area:

PowLevel X . X dB

This power value is the system's default or that set for last dot power level operation.

Enter 0 and then press the unit key【dBm】to confirm the entry. Then the power value displayed in the present entry display area and main parameter display area will change to that just entered.

If the power level entered exceeds the power range of the signal generator, the display area will display the upper and lower limit values closest to that entered. If the power level entered exceeds the leveled power range that signal generator can generate, the message lines in the display area will show unstable amplitude, and it is also possible to change the entered data by the knob and navigation keys.

4.2.3 Sweep Operation

Sweep function is one of many important functions of the signal generator. This signal generator mainly provides two sweep

modes: step sweep and list sweep.

1) Step Sweep Operation:

Press【Freq】key

Set start frequency and stop frequency.

Press the softkey [More 1/2]

Press the softkey [StepSwp]

Set frequency step, number of step points, dwell time, step trigger, etc.

At this moment, the system operates in continuous step sweep mode, repeating sweep from start frequency to stop frequency continuously.

Switch from continuous sweep to single sweep:

Press【Sweep】key.

Press the softkey [SwpContrl] to activate the softkey [Single].

At this moment, the system switches continuous sweep to single sweep mode.

2) List Sweep Operation:

Press【Freq】key.

It is possible to set start frequency and stop frequency.

Press the softkey [More 1/2].

Press the softkey [ListSwp].

Press the softkey [Enter List] to set the frequency, power offset and dwell time, etc. of the sweep.

At this moment, the system operates in list sweep mode, repeating sweep from the first set point to the last set point continuously.

Switch from continuous sweep to single sweep:

Press【Sweep】key.

Press the softkey [SwpContrl] to activate the softkey [Single].

At this moment, the system switches continuous sweep to single sweep mode.

4.2.4 Pulse Modulation Operation

Pulse modulation is an analog modulation function of the signal generator that can enable the signal generator to output pulse modulation signals of specific period and specific width.

For example: Set pulse modulation of pulse width of 5μs and pulse period of 10μs

- Operation steps:

Press the【Mod On Off】key (“Mod” is displayed on the panel)

Press the【Mod】key

Press the softkey [PulseMod]

Press the softkey [Pulse On] (“PM” is displayed on the panel)

Press the softkey [Pulse Input]

Press the softkey [Int Auto]

Press the【Back】key

Press the softkey [Pulse Width] and enter【5】【μs】

Press the softkey [Pulse Period] and enter【1】【0】【μs】

At this moment, the instrument output pulse modulation signal of pulse width of 5μs and pulse period of 10μs. The carrier frequency is current frequency and the carrier power is the current power.

4.2.5 Amplitude Modulation Operation

Amplitude modulation is an analog modulation function of the signal generator that can enable the signal generator to output amplitude modulation signals of specific AM rate and specific AM depth.

For example: Set amplitude modulation of AM rate of 1kHz and AM depth of 30%.

- Operation steps:

Press the【Mod On Off】key ("Mod" is displayed on the panel)

Press the【Mod】key

Press the softkey [AM]

Press the softkey [AM *On*] ("AM" is displayed on the panel)

Press the softkey [AM Input]

Press the softkey [Int]

Press the key【Back】

Press the softkey [AM Rate] and enter【1】【kHz】

Press the softkey［AM Depth］and enter【3】【0】, press any key to confirm.

At this moment, the instrument outputs amplitude modulation signal of AM rate of 1kHz and AM depth of 30%. The carrier frequency is the current frequency and carrier power is the current power.

4.2.6 Frequency Modulation Operation

Frequency modulation is an analog modulation function of the signal generator that can enable the signal generator to output frequency modulation signals of specific FM rate and specific FM deviation.

For example: Set frequency modulation of FM rate of 1kHz and FM deviation of 10kHz.

- Operation steps:

Press the【Mod On Off】key ("Mod" is displayed on the panel)

Press the【Mod】key

Press the softkey [FM]

Press the softkey [FM *On*] ("FM" is displayed on the panel)

Press the softkey [FM Input]

Press the softkey [Int 1MHz]

Press the key【Back】

Press the softkey [FM Rate] and enter【1】【kHz】

Press the softkey［FM Devia］and enter【1】【0】【kHz】

At this moment, the instrument outputs frequency modulation signal of FM rate of 1kHz and FM deviation of 10kHz. The carrier frequency is the current frequency and carrier power is the current power.

4.2.7 Phase Modulation Operation

Phase modulation is an analog modulation function of the signal generator that can enable the signal generator to output phase modulation signals of specific phase rate and specific phase deviation.

For example: Set phase modulation of phase rate of 1kHz and phase deviation of 1rad.

- Operation steps:

Press the【Mod On Off】key ("Mod" is displayed on the panel)

Press the【Mod】key

Press the softkey [PhaseMod]

Press the softkey [PhaseMod On] ("φM" is displayed on the panel)

Press the softkey [PhaseMod Input]

Press the softkey [Int]

Press the key【Back】

Press the softkey [Phase Rate] and enter【1】【kHz】

Press the softkey［Phase Devia］and enter【1】, press any key to confirm.

Press the softkey [PhaseBW *0.1M*] and select the 0.1M ("0.1M" is highlighted by default)

At this moment, the instrument outputs phase modulation signal of phase rate of 1kHz and phase deviation of 1rad. The carrier frequency is the current frequency and carrier power is the current power.

4.2.8 Vector Modulation Operation

Vector modulation is an important modulation function of the signal generator if it has vector modulation module that can enable the signal generator to output specific vector modulation signals.

For example: Set the vector modulation of NYQUIST filter of modulation type QPSK, rate 4MHz and α=0.3 (if the instrument is provided with internal baseband signal generator).

- Operation steps:

Press the【Mod On Off】key ("Mod" is displayed on the panel)

Press the【I/Q】key

Press the softkey [I/Q Mod On] ("I/Q" is displayed on the panel)

Press the softkey [I/Q ModSour]

Press the softkey [Int]

Press the key【BaseBand】

Press the softkey [Rate] and enter【4】【MHz】

Press the softkey［α/BT］ and enter【0】【.】【3】, press any key to confirm.

Press the softkey [Filter]

Press the softkey [NYQUIST]

Press the key【Back】

Press the softkey [Modu Type]

Press the softkey［QPSK］

At this moment, the instrument outputs vector modulation signal of modulation type QPSK, rate 4MHz and α=0.3. The carrier frequency is the current frequency and carrier power is the current power.

4.2.9 Save and Recall an Instrument State

The save/recall register can save and recall an instrument state that has been set. For example: set the signal generator from sweep in step of 1GHz to 6GHz and power level to 0dBm.

Set frequency and power.

Save the above instrument state into the register:

Press【Save】key.

Press the [RegIndex] key, enter【0】in the entry display area and press a unit key to confirm.

The instrument pops up the message “In operation, please wait!”, the system saves current set state of the instrument automatically and then the system is out of user’s control. This message will disappear automatically after saving, and the system will release control of the instrument.

NOTE: This present instrument can save 10 states of the instrument at the utmost, i.e. the index register 0 through to 9 can save a state each.

Verify whether the signal generator has saved the above state:

Press the【Reset】key.

Press the【Recall】key.

Press the [RegIndex] key, enter【0】in the current entry area and press a unit key to confirm.

The instrument pops up the message “In operation, please wait!”, the system automatically recall the instrument state saved in register, and then the system is out of user’s control. This message will disappear automatically after recalling, the system will release control of the instrument.

Observe if the instrument is switching from sweep in step of 1GHz to 6GHz at power level of 0 dBm.

Save/Recall Register

Save	Recall
1. Set a state for the signal generator. 2. Press【Save】key. 3. Press the [RegIndex] key and enter an index no. 4. Press the unit key to confirm.	1. Press the【Recall】key. 2. Press the [RegIndex] key and enter an index no. 3. Press the unit key to confirm.

4.3 Senior Operation Manual

4.3.1 Impact of Inverse Power at Connecting a Mixer

CAUTION: in the signal generator provided with a step attenuator, its output power P=ALC at power P0 – attenuation **A. In which, when P≥**-5dBm, A=0 **,** P=P0; when P<-5dBm, P0 is less than 0dBm but more than -5dBm.

It is to describe that the attenuator Hold Mode is used for mixer test. In the example shown in Figure 4-1, the output power of the signal generator is -4dBm, in internal leveling mode, the attenuator's attenuation =0dB and ALC Power Level = -4dBm. The Local Oscillation (LO) drive of the mixer is +10dBm, and the isolation from LO to the RF output of signal generator is 13dB. The power from LO feedthrough to the output end of signal generator is -3dBm that passes the attenuator without loss and reaches the internal detector. For some frequencies, most of this energy can enter the detector. But the input response of detector has little to do with frequency. This energy makes the leveling circuit of signal generator reduce power output. In this example, the inverse power is actually higher than ALC Power Level, thus turning off the power output of the signal generator in fact.

In the example shown in Fig 4-2, the -4dBm power output is generated by the mode of Attenuator Hold. In this example, attenuation=10dB. ALC Power Level=+6dBm. The LO power of mixer is 10dBm. The attenuator attenuates LO inverse power in attenuation step of 10 dB and the LO inverse power is -3dBm. In this way, the inverse power of only -13dBm passes the detector. Thus the detector has the needed ALC level of +6dBm and the unneeded inverse power of -13dBm through. The difference of 19dBm only causes a drift of about 0.1dB for the output level of the signal generator. Set the signal generator in the mode of Attenuator Hold:

1) Press the【Power】key.

2) Select [Atten *Man* Auto] and enter【10】【dBm】in the entry display area. This step accomplishes two events: one is to set the working mode of the attenuator in ALC system to Manual and the other is to set attenuation that is 10dB in this example.

3) Select the softkey [PowLevel] and enter【6】【dBm】in the entry display area.

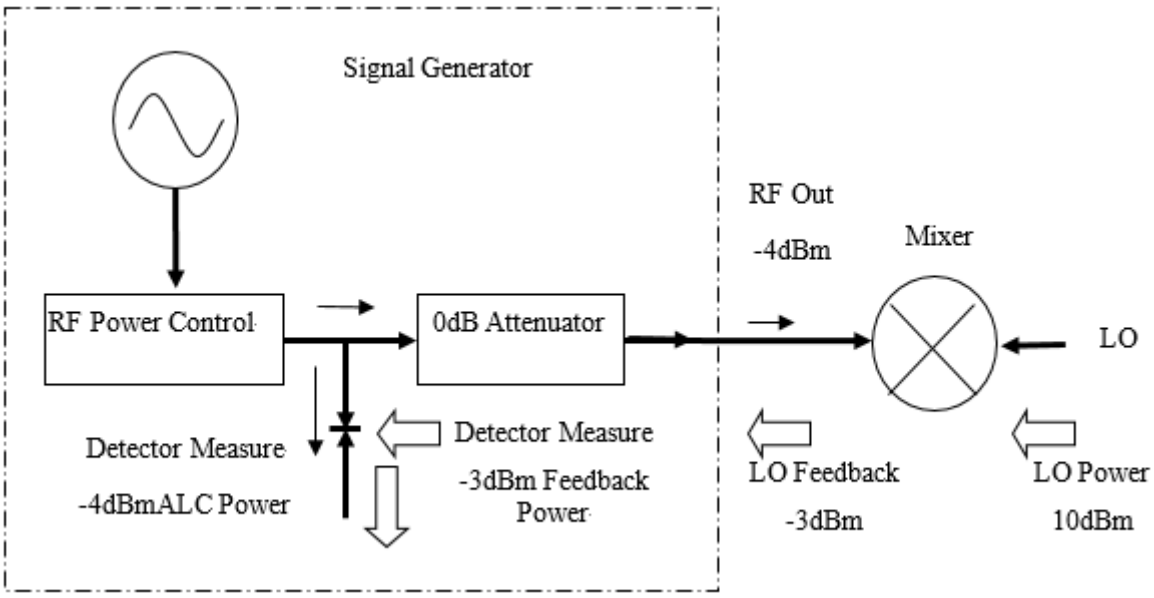

Figure 4-1 Inverse Power Impact, Direct Output-4dBm

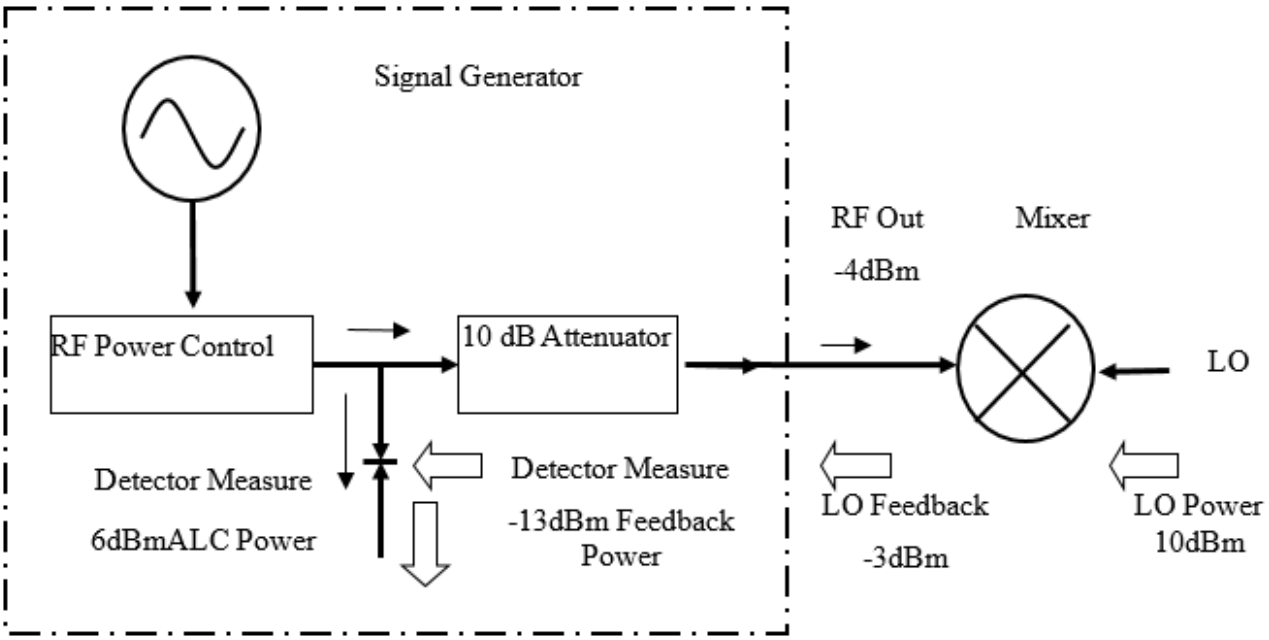

Figure 6-2 Inverse Power Impact, Output through Attenuator -4dBm

4.3.2 Impact of Inverse Power when connecting a Spectrum Analyzer

Inverse power is a trouble for the spectrum analyzer without pre-select ability. Some spectrum analyzers have a feedthrough power around +5dBm at some frequencies. The problem of inverse power can be solved by the non-stable amplitude mode.

Set the signal generator to ALC Off mode:

1) Press the【Power】key,［More 1/3］,［More 2/3］.

2) Press［LoopStat Close *Open*］and select the open state.

In this case, the signal generator provides RF power without ALC calibration.

4.3.3 External Leveling of Signal Generator

4.3.3.1 Brief introduction

In external leveling mode, the output power of signal generator is detected by the external sensor, the detected voltage is sent back to the leveled circuit of the signal generator and the output power automatically calibrates to keep power constant at the detection point.

4.3.3.2 Leveling with detector/coupler/ splitter

Figure 4-3 illustrates a typical setup for external leveling. When externally leveled, the power level is fed back from the external negative voltage output detector rather than the internal detector. This feedback voltage controls the ALC system thus controls the output power.

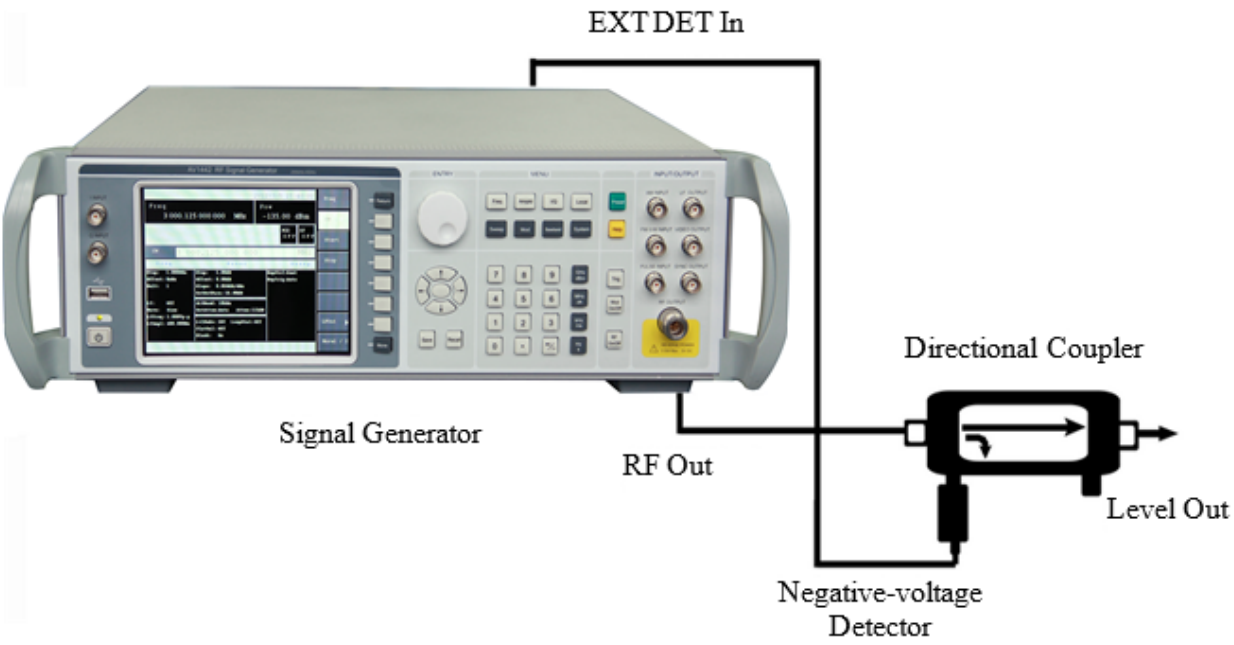

Figure 4-3 ALC Circuit External Leveling

Set external leveling:

1) Connect the instrument as shown in Figure 4-3.

2) Press the【Power】key, [More 1/3], [More 2/3].

3) Select the softkey [LvlMode] and [Extrnl].

Set coupling parameters:

Press the【Power】key and then the softkey [ExtDet Para], Enter【20】【dBm】in the current display area (provided that the coupling degree of directional coupler is 20dB).

CAUTION: The coupling degree of power splitter is 0dB.

4.3.3.3 Leveling with step attenuator

Some external leveling applications require low output power from the signal generator. The signal generator automatically turns the attenuator to manual mode for all the external leveling points of ALC system.

For example, if it is desired to measure an amplifier with a 30 dB gain and -10 dBm leveling output, the signal generator needs to output -40 dBm. At some frequencies, this power level is beyond the control range of ALC modulator. If so, the Unstable Amplitude warning message will be displayed in the message line. Insert an attenuator of 40dB into ALC circuit of 0 dBm, then 0 dBm is within the control range of ALC.

To optimize display accuracy and noise floor, the ALC level should be larger than -10dBm. This can be achieved by using attenuation equal to the tens digit of output power. Example: for a desired output power of -43 dBm; attenuation: 40dB; ALC power: -3dBm.

1) Press【Power】and set [PowLevel] to【-3】【dBm】.

2) Select [Atten Man Auto] and enter【40】【dBm】in the entry display area.

4.3.4 Optimizing the Performance of Signal Generator

4.3.4.1 Create and apply user flatness calibration arrays

There are two basic operating methods to create flatness calibration arrays. One is the fastest method: Use power meter to calibrate through GPIB interface. The second one is manual compensation. The following two examples illustrate user flatness calibration function.

4.3.4.2 Automatically create user flatness calibration arrays

Example 1: use SAV2432 power meter to perform flatness calibration for 1GHz-3GHz sweep automatically.

In this example, flatness calibration is performed to 1GHz~3GHz at intervals of 100MHz. The signal generator controls SAV2432 Power Meter through GPIB to create correction arrays.

1) Connect the instrument as shown in Figure 4-5.
2) Calibrate power meter/sensor
3) Enter appropriate power sensor calibration parameters to the power meter.
4) Enable power meter/sensor calibration parameter. Refer to its User's Manual for the operation of SAV2432 Power Meter.
5) Connect the power sensor to the power output connector to be calibrated.
6) Set signal generator. Press【Reset】key on the signal generator.
7) Set power level to【0】【dBm】.
8) Press【Power】and [More 1/3] and select the softkey [UserFlat].
9) Press [Delete] and select [All]. This step ensures zero clearing of calibration data.
10) Press【Back】to return to the previous menu from the delete menu.
11) Enter the frequency of the point to be calibrated. Select "Entry point by point" mode to enter continuous wave or create frequency dot mode automatically. The example adopts Auto Fill function.
    a) Press [More 1/2].
    b) Select [Auto Fill], press [Start] and enter【1】【GHz】in the entry area of the display area.
    c) Press [Stop] and enter【3】【GHz】in the entry area of the display area.
    d) Press [#Pts] and enter【100】【MHz】in the entry area of the display area.
    e) The frequency list displays start frequency is 1GHz and stop frequency is 3GHz that increases by 100MHz and enter calibration data.
12) Select【System】and [GPIB]. Set GPIB address, programming language and power meter selection.
13) Press【Power】and [More 1/3], select [UserFlat] and press [MeasCorr], Select [All] and the power meter is now under control of the signal generator to perform calibration on all frequency points continuously.
14) When the operation is done and a prompt message appears on the display, use the left and right arrow keys to select

[Enter], press any key to confirm and save the calibration array, then the flatness calibration array can be used. Remove the power sensor and power meter

15) Press【Power】and select [Fltness *On* Off]. The power at the connection point where the sensor was will be calibrated according to the preset frequency points and power levels.

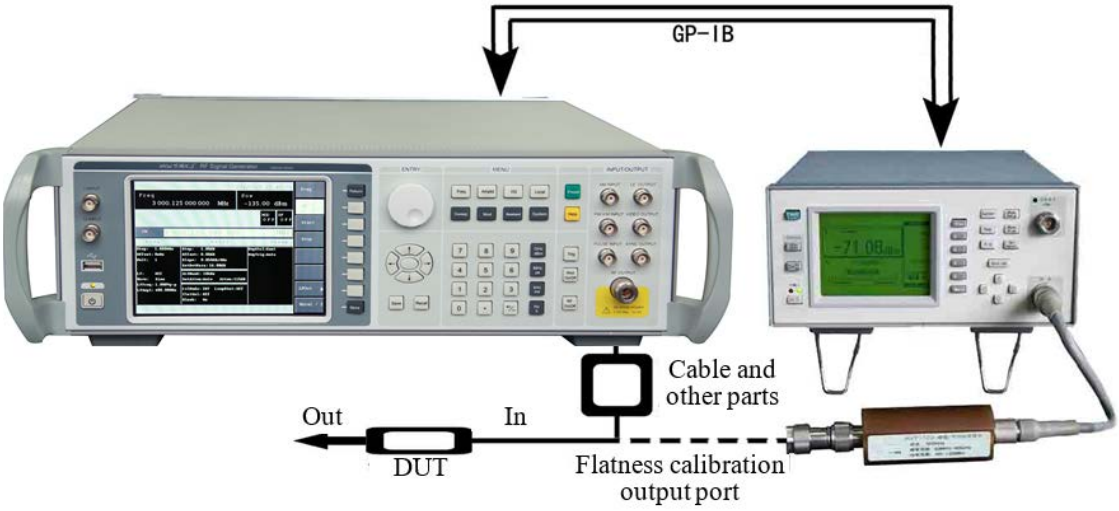

Figure 4-5 User Flatness Calibration

4.3.4.3 Manually perform user flatness calibration function

Example 2: Enter flatness calibration data manually during step measurement.

This example introduces how to use the signal generator and power meter to perform flatness calibration in manual mode, as well as the two features of the signal generator. Frequency follow function has simplified the entry process. It is possible to set test frequency list by the soft menu.

Setting frequency follow can automatically set the signal generator to the test continuous wave, which is equal to the current active frequency in the flatness calibration list. Move the list with navigation keys on the front panel and enter calibration data of the response frequency. Without exit from the list, the test frequency of the signal generator can make timely correction according to the selected calibration frequency. To further simplify data entry, you can enter the cal data into to the flatness calibration list and turn the knob on the front panel till the power meter displays the set power level. The flatness calibration algorithm automatically computes and acquires proper calibration parameters and enters them into the list. If you already have calibration data list on your hand, you can enter the data into the list directly through keys on the front panel of the signal generator.

In the list function, you can enter test frequencies in any sequence. Set power offset or dwell time for every frequency. When the list mode is enabled, the signal generator will display frequencies step by step in the preset sequence.

The user flatness calibration function can enter frequency lists into calibration lists. Because power offset is not activated when data are entered by using user flatness calibration function, the values of the entered calibration data are the same no matter whether they are offset or not. If the user flatness calibration and list modes (with offset) are activated, the calibration power of the signal generator would calibrate every test frequency according to the combination of offset and calibration data. The power level must be ensured to be within the range of ALC.

1) Connect the instrument as shown in Figure 4-5.

2) Zero the power meter/sensor

3) Connect the power sensor to the power output connector to be calibrated.

4) Set the parameters of the signal generator. Press【Reset】on the signal generator.

5) Press [PowLevel] and enter【5】【dBm】.

6) Press the【Freq】key on the signal generator and [More 1/2] and select [ListSwp]. Press [Enter List] and softkey [Freq]. Enter【4】【GHz】in the entry display area as the first frequency in the list. The system automatically sets power offset to 0dB and dwell time to 10ms.

7) Enter 1, 3, 2 and 5GHz in the same way to complete frequency entry.

8) Next is the introduction of the use of the user flatness calibration menu. Press【Power】and [More 1/3] and select [UserFlat]. Press [Delete] and select softkey [All]. This step ensures zero clearing of calibration data.

9) Press【Back】to return to the previous menu from the delete menu.

10) Press [More 1/2] and [CopyList] to copy frequency list into the cal list in sequence.

11) Press [More 2/2] and select [FreqFolw *On* Off] to set the signal generator to continuous wave mode so as to receive calibration data easily. When browsing through calibration cells, the signal generator will generate corresponding continuous wave signals of 5dBm.

12) Press [Enter] and select [Adjust Data] to continue entering calibration data.

13) Press【Power】and select [Fltness *On* Off] to enable user flatness calibration that is active.

14) For 3GHz signals, set appropriate power meter sensor parameters on the meter.

15) Use the knob on the signal generator to adjust a 5dBm test on the power meter. Note that the calibration value is entered at 3GHz.

16) Use the Up navigation key to move to the next calibration cell.

17) For 4GHz signals, set appropriate power meter sensor parameters on the meter.

18) Use the knob on the signal generator to adjust a 5dBm test on the power meter. Note that the cal value is entered at 4GHz.

19) Repeat the above steps till all corresponding frequency points are entered with a cal data.

20) Activate list sweep mode. Press【Sweep】key and select softkey [SwpMode]. Press [List].

21) Remove the power sensor and power meter. Calibrate the power at the original sensor connection in accordance with the previous frequency and the preset power level.

4.3.5 Changing Reset Parameters

1) Set the reset state of the signal generator as required.

2) Press【System】key.

3) Press [More 1/2] and then [SaveUser Preset]

4) Press [ResetMode Defa *User*].

Whenever you press reset key, the signal generator will return to the state that was set and saved through step a) and d). The signal generator displays the saved preset state and at the same time provides the default preset menu [ResetMode *Defa* User] for user to choose. If you press the softkey [ResetMode Def User], the signal generator resets and returns to factory reset mode.

5 Menu

5.1 Frequency

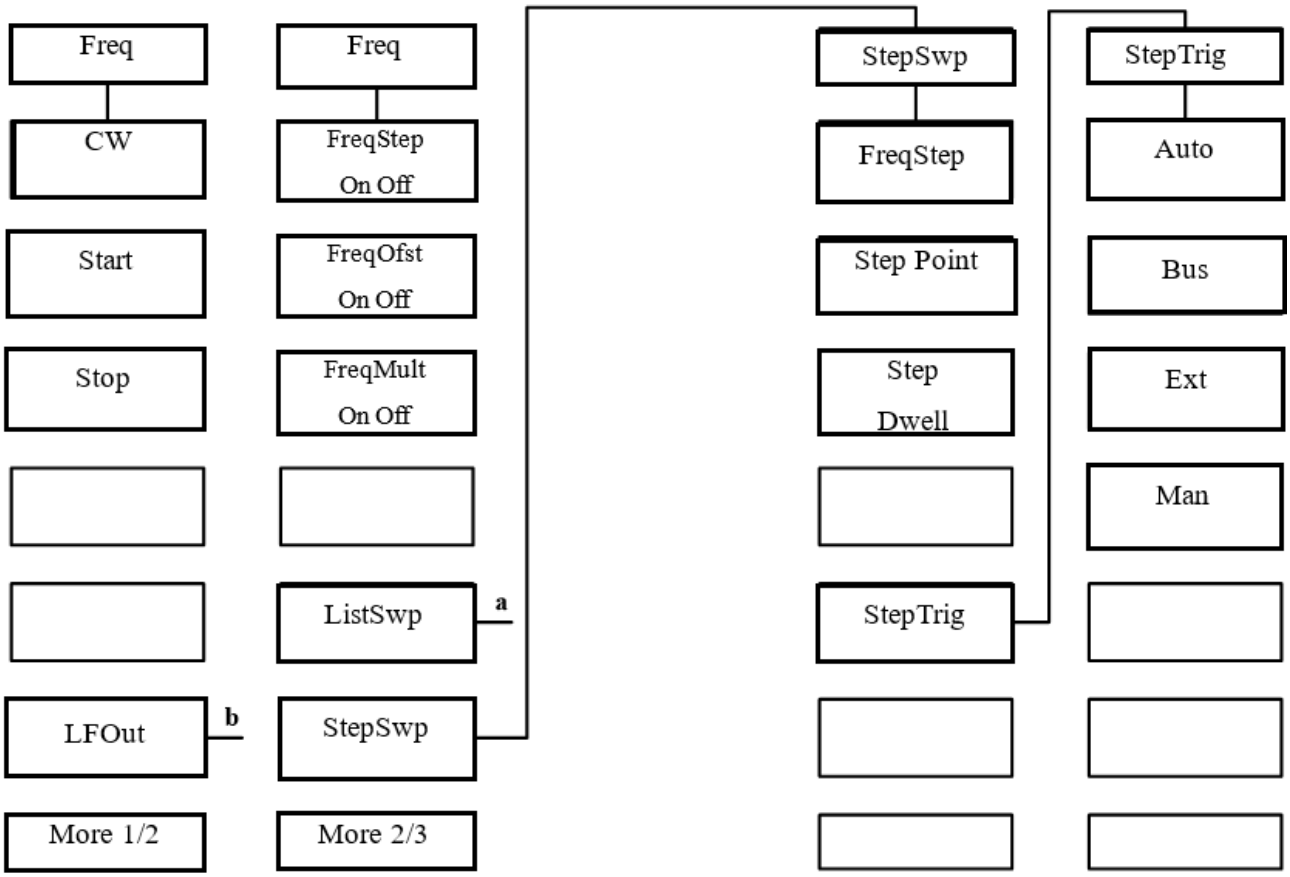

Figure 5-1a: Frequency Menu-1

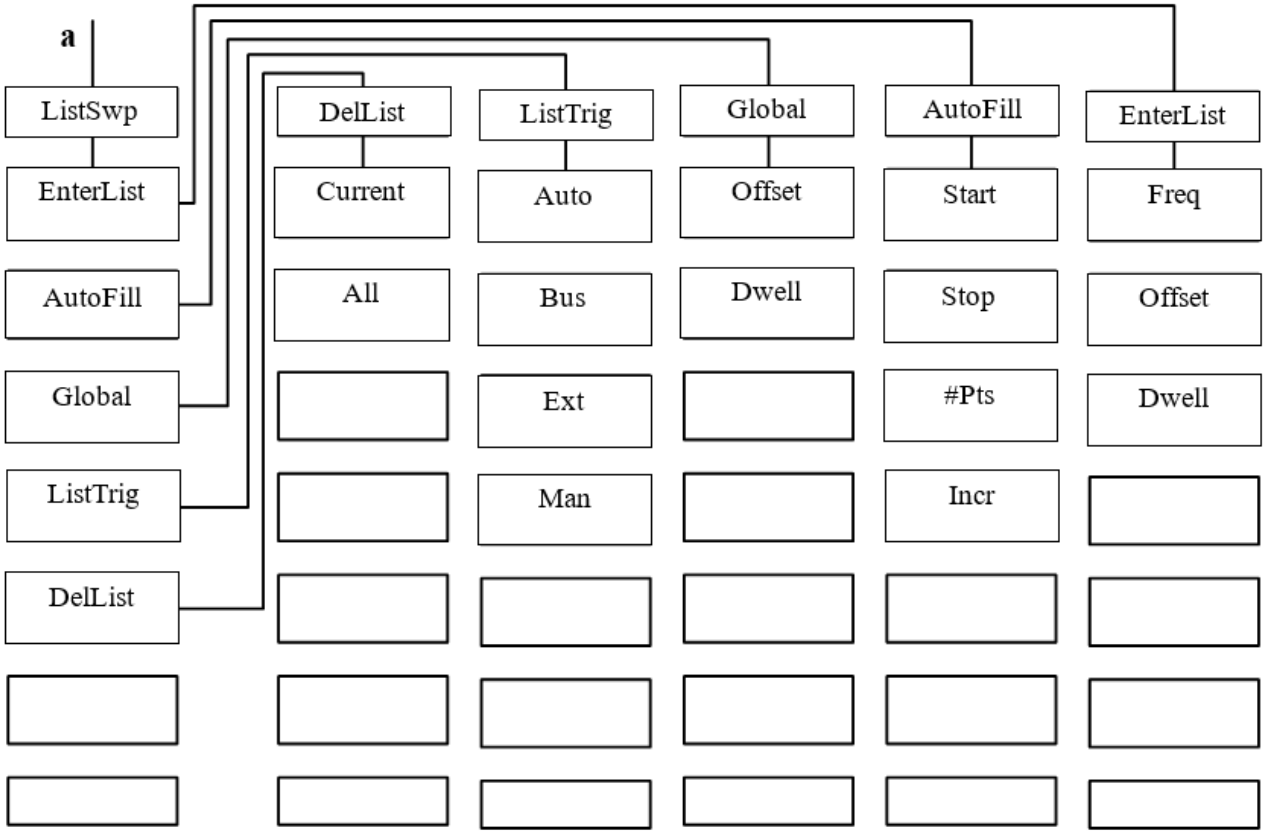

Figure 5-1b Frequency Menu -2

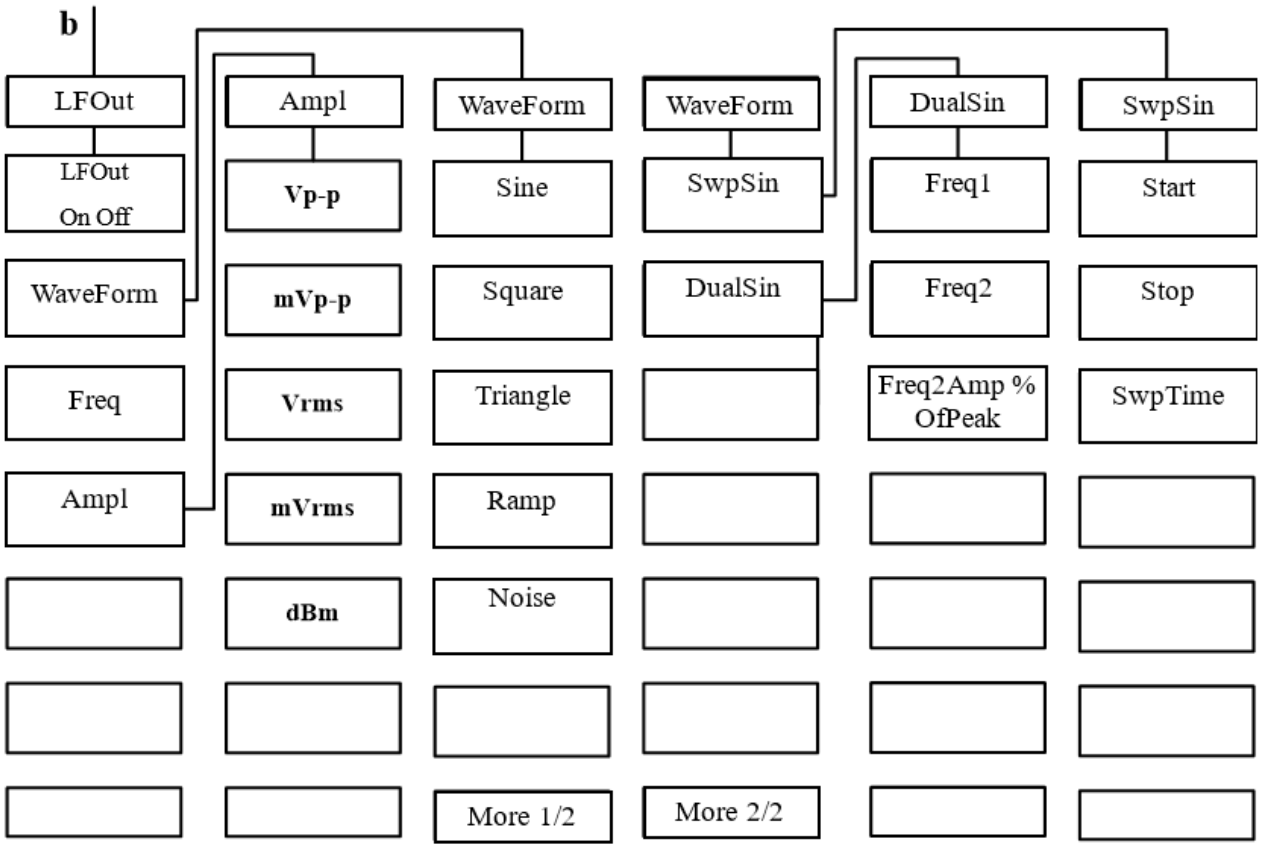

Figure 5-1c Frequency Menu -3

All frequency functions including frequency multiplication accept parameters in Hz. The entered figures must end with one of the 4 frequency units (GHz, MHz, kHz or Hz). When entry is done, it will automatically display the new frequency value in proper unit.

In the frequency sweep mode (except list sweep), the instrument can only sweep from low frequencies to high frequencies, therefore, the stop frequency cannot be lower than the start. If the entered start frequency is higher than the stop, the latter will become equal to the start. If the entered stop frequency is lower than the start, the latter will become equal to the stop.

The main frequency menus include: CW, Start, Stop, LFOut, FreqStep On Off, FreqOfst On Off, FreqMult On Off, CF Copl/Ind, ListSwp, StepSwp, Phase Ref, Phase Adjust and etc.

- CW

It activates the CW frequency mode and allows setting CW frequency.

- Start

It activates step sweep and allows setting the frequency at the start point of sweep.

- Stop

It activates step sweep and allows setting the frequency at the stop point of sweep.

- FreqStep [On/Off]

It sets the CW frequency step value by using the up and down navigation keys to change the step size ranging from 1Hz to 6GHz. The default frequency step setting is 100MHz.

The highlighted background color of the softkey line indicates the state has been selected. The default setting is [Off].

When it is On, a popup dialog box will appear, requiring entry of the sweep step size.

- FreqOffst [On/Off]

It sets frequency offset for all relevant frequency parameters ranging from -325GHz to +325GHz.

The highlighted background color of the softkey line indicates the state has been selected. The default setting is [Off].

When it is On, a popup dialog box will appear, requiring entry of the frequency offset.

- FreqMult [On/Off]

It sets frequency multiplier factor for all frequency parameters. The frequency offset is equal to actual output frequency multiplying the multiplier factor that is an integer between 1 and +36. The default frequency multiplier factor is 1.

The highlighted background color of the softkey line indicates the state has been selected. The default setting is [Off].

When it is On, a popup dialog box will appear, requiring entry of the multiplier factor.

- ListSwp

It executes list sweep menu. It helps the user enter or edit frequency list parameters through the front panel.

- EnterList [Freq]

It allows adding a frequency into the frequency list. The number of list frequency points is between 1 and 1601.

- EnterList [Offset]

It allows entering the power offset relative to the reference power into every frequency point in frequency list. The reference power is set by [PowLevel] key.

- EnterList [Dwell]

It allows setting dwell time for every frequency point in the frequency list.

- DelList [Current]

It deletes the current frequency point as well as its offset and dwell time in the list.

- DelList [All]

It deletes all the points in frequency list.

- ListTrig

It executes list sweep trigger menu.

- ListTrig [Auto]

Once it is selected, the signal generator will hop automatically to the next frequency point in the list. The interval between the two points is equal to dwell time plus phase locking time.

The highlighted background color of the softkey line indicates the state has been selected. The default setting is [Auto].

- ListTrig [Bus]

When the signal generator receives the trigger signal (*TRG，（GET）) from GP-IB bus, the signal generator will hop to the next frequency point in the list.

- ListTrig [Ext]

When the signal generator receives the trigger signal from external equipment through BNC connector, it will hop to the next frequency point in the list.

- ListTrig [Man]

When the signal generator receives the manual trigger signal from users, it will hop to the next frequency point in the list.

- AutoFill [Start]

In the “Auto-creating frequency list” mode, it sets the start frequency value of list sweep. It does not influence the start frequency of the instrument.

- AutoFill [Stop]

In the “Auto-creating frequency list” mode, it sets the stop frequency value of list sweep. It does not influence the stop frequency of the instrument.

- AutoFill [#Pts]

In the “Auto-creating frequency list” mode, it sets the frequency interval of list sweep to create frequency lists automatically. It starts from the start frequency point set by [Start] and stops at the stop frequency a little less than or equal to that set by [Stop].

- AutoFill [Incr]

In the “Auto-creating frequency list” mode, it sets the number of frequency points in list sweep, thus creating frequency lists automatically. The number of frequency points includes the start point set by [Start] and the stop point set by [Stop]. Other points are evenly distributed between the start frequency point and stop frequency point of the list.

- Global [Offset]

It sets the output power correction value of all frequency points in the frequency list to that set by the user.

- Global [Dwell]

It sets the dwell time of all frequency points in the frequency list to that set by the user.

- StepSwp

It executes Step Sweep menu.

- FreqStep

It sets the frequency step value of step sweep.

- Step Point

It sets the number of frequency points for step sweep within the range from 2 to 1601.

- Step Dwell

It sets the dwell time of every frequency point in step sweep, ranging from 1ms to 60s. The interval between two points during step sweep is equal to dwell time plus phase locking time.

- StepTrig [Auto]

In step sweep, the signal generator automatically sweeps to the next frequency point. The interval between two points is equal to dwell time plus phase locking time.

The highlighted background color of the softkey line indicates the state has been selected. The default setting is [Auto].

- StepTrig [Bus]

In step sweep mode, when the signal generator receives the trigger signal (*TRG，〈GET〉) from GP-IB bus, it will sweep to the next frequency point.

- StepTrig [Ext]

In step sweep mode, when the signal generator receives the trigger signal from external equipment through BNC connector, it will sweep to the next frequency point.

- StepTrig [Man]

In step sweep mode, when the signal generator receives the trigger signal from manual trigger it will sweep to the next frequency point.

- LFOut

It executes functions relating to LF signal generator, mainly including: LFOut On Off, Output Source, Freq, Ampl, DC Offset, WaveForm and function generator, etc.

- LFOut [On/Off]

It selects LF signal output.

The highlighted background color of the softkey line indicates the state has been selected. The default setting is [Off].

- WaveForm

It executes the waveform selecting menu.

- WaveForm [Sine]

It sets the waveform of LF signal output to sine.

The highlighted background color of the softkey line indicates the state has been selected. The default setting is [Sine].

- WaveForm [Square]

It sets the waveform of LF signal output to square.

- WaveForm [Triangle]

It sets the waveform of LF signal output to triangle.

- WaveForm [Ramp]

It sets the waveform of LF signal output to ramp.

- WaveForm [Noise]

It sets the waveform of LF signal output to noise.

- WaveForm [SwpSin]

It sets the waveform of LF signal output to swept-sine.

- WaveForm [DualSin]

It sets the waveform of LF signal output to dual-sine.

- SwpSin [Start]

It sets start frequency of swept-sine.

- SwpSin [Stop]

It sets stop frequency of swept-sine.

- SwpSin [SwpTime]

It sets sweep time of swept-sine.

- DualSin [Freq1]

It sets the value of frequency 1 in dual-sine.

- DualSin [Freq2]

It sets the value of frequency 2 in dual-sine.

- DualSin [Freq2Amp %OfPeak]

It sets the amplitude percentage of frequency 2 in dual-sine.

- Freq

It sets the frequency of LF signal output within the range of 0.01Hz-1MHz.

- Ampl

It sets the amplitude of LF generator.

- Ampl [Vp-p]

It sets amplitude unit to Vp-p.

- Ampl [mVp-p]

It sets amplitude unit to mVp-p.

- Ampl [Vrms]

It sets amplitude unit to Vrms.

- Ampl [mVrms]

It sets amplitude unit to mVrms.

- Ampl [dBm]

It sets amplitude unit to dBm.

5.2 Power

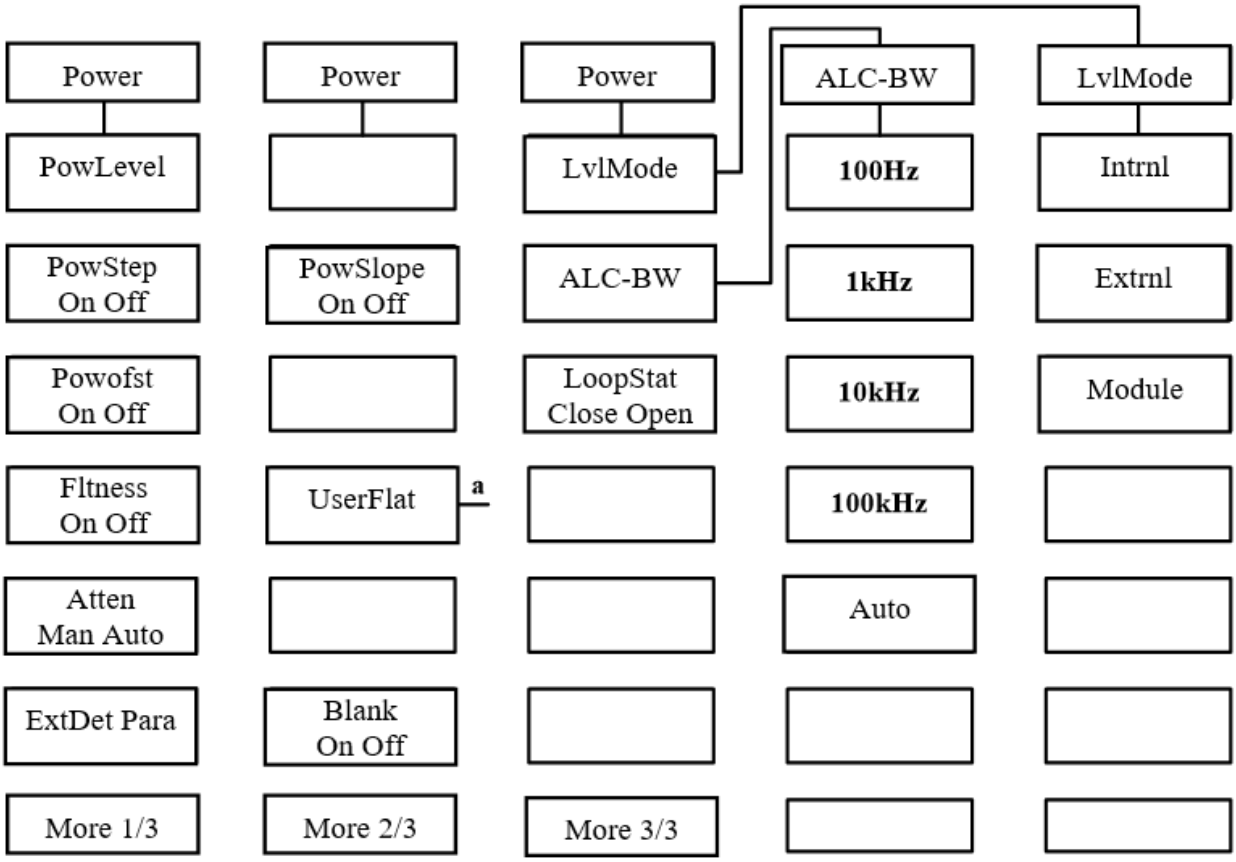

Figure 5-2a Power Menu Diagram -1

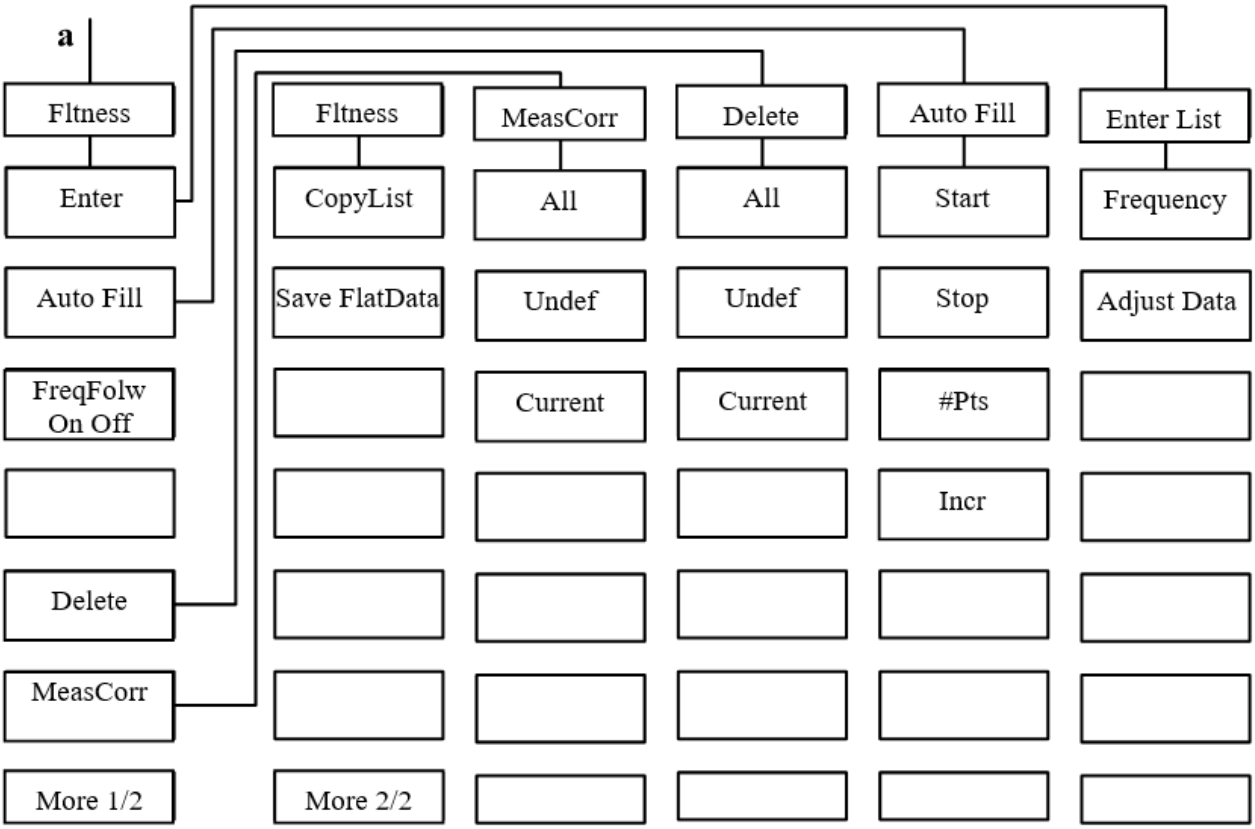

Figure 5-2b Power Menu Diagram -2

The Power key is used to set power related parameters for the signal generator. Press [Power], the current active parameters will be displayed in corresponding areas of the display. The signal generator is unable to give unit automatically, so you have to press the corresponding unit key to enter the unit you need after entering data in order to confirm the entry. The power menu mainly includes: PowLevel, PowStep On/Off, Powofst On/Off, Fltness On/Off, Atten Man/Auto, PowSweep On/Off, PowSlope On/Off, ALC, UserFlat and etc.

- PowLevel

It sets the leveled output power level for the signal generator. The unit is dBm.

- PowStep [On/Off]

It sets power step for the signal generator within the range from 0.01dB to 20dB. In this mode, the value of power step can also be changed by the UP/DOWN arrow keys.

The highlighted background color of the softkey line indicates the state has been selected. The default setting is [Off].

- Powofst [On/Off]

It sets the displayed or set output power of signal generator to its actual output power plus power offset. This operation will not change the instrument's RF output power. Their relationship abides by the following equation: Displayed/Set power= Actual RF Output Power+ Power Offset

The highlighted background color of the softkey line indicates the state has been selected. The default setting is [Off].

- Fltness [On/Off]

It turns on or off user flatness calibration data enable, that is, to decide whether to use user flatness calibration data to compensate output power. Every time this key is pressed, it will make the user flatness calibration data enable and the compensation indicator switch between On and Off.

The highlighted background color of the softkey line indicates the state has been selected. The default setting is [Off].

- Atten [Man]

It sets the value of attenuator manually within the range from 0dB to 115dB (or from 0dB to 90dB depending on the attenuator options inside the instrument.) in a step of 5 dB (if the attenuator option of 90 dB is selected, it will be in a step of 10 dB). It sets the attenuation value and also enables the attenuator.

- Atten [Auto]

It is used to automatically set the value of attenuator of the signal generator and enable it. The current output power remains unchanged.

The highlighted background color of the softkey line indicates the state has been selected. The default setting is [Auto].

- ExtDet Para

It determines the coupling factor of external directional coupler for leveling. It is used when the power is in the mode of external leveling mode. The range for the coupling factor is from -90dB to 90dB.

- PowSlope [On/Off]

It makes the output power of signal generator change linearly with frequency. The range of the slope is from -2dB/GHz to +2dB/GHz. The initial value of power is its current value.

The highlighted background color of the softkey line indicates the state has been selected. The default setting is [Off].

- Blank [On/Off]

It sets the On/Off state of the power of signal generator when frequency is switching.

- LvlMode [Intrnl]

It sets the leveling mode of signal generator to internal power leveling.

The highlighted background color of the softkey line indicates the state has been selected. The default setting is [Intrnl].

- LvlMode [Extrnl]

It sets the leveling mode of signal generator to external diode detection leveling. It requires that the detection source output power of a negative voltage output crystal detector connect to the external detection input BNC connector on the front panel of the signal generator. To select this leveling mode, you have to input the coupling factor and calibrate the external detector to obtain calibrated leveled power output.

- LvlMode [Module]

Not available now.

- ALC-BW

It selects ALC-BW menu. You can select 10Hz, 1kHz, 10kHz, 100kHz or Auto. The default setting is [Auto].

- ALC LoopStat [Close]

It keeps the signal generator in normal continuous leveling mode through the mode selected by user.

The highlighted background color of the softkey line indicates the state has been selected. The default setting is [Close].

- ALC LoopStat [Open]

It cancels ALC leveling function. In this way the signal generator can provide uncalibrated power through direct control over the internal linear modulators and step attenuators. The accuracy of the output power is low if using navigation keys and knob to

set the modulator. Thus in [Power] menu, you can use [Atten Man/Auto] to set the attenuator.

- UserFlat

It executes the selected user flatness menu. The user can enter and edit the flatness calibration parameters on the front panel.

- Enter [Frequency]

It allows entry of a frequency point into the flatness calibration array.

- Enter [Adjust Data]

It allows entry of the corresponding power calibration value at a frequency point into the flatness calibration array.

The highlighted background color of the softkey line indicates the state has been selected.

- FreqFolw [On/Off]

It turns on or off the frequency follow function. When this function is on, the signal generator automatically sets the RF output frequency of the current point in the flatness calibration array to the instrument output frequency, and allows the user to set the calibration value at each point.

The highlighted background color of the softkey line indicates the state has been selected. The default setting is [Off].

- Delete

It selects the Delete menu.

- Delete [All]

It deletes all points in the flatness calibration array.

- Delete [Undef]

It deletes all points with undefined calibration value in the flatness calibration array.

- Delete [Current]

It deletes the frequency of current lineand its corresponding calibration value from the flatness calibration array.

- MeasCorr [All]

It measures the power calibration values of all frequency points in the power flatness calibration array.

- MeasCorr [Undef]

It measures the power calibration values of all frequency points with undefined calibration values in the power flatness calibration array.

- MeasCorr [Current]

It measures the power calibration value of current line in the power flatness calibration array.

5.3 Sweep

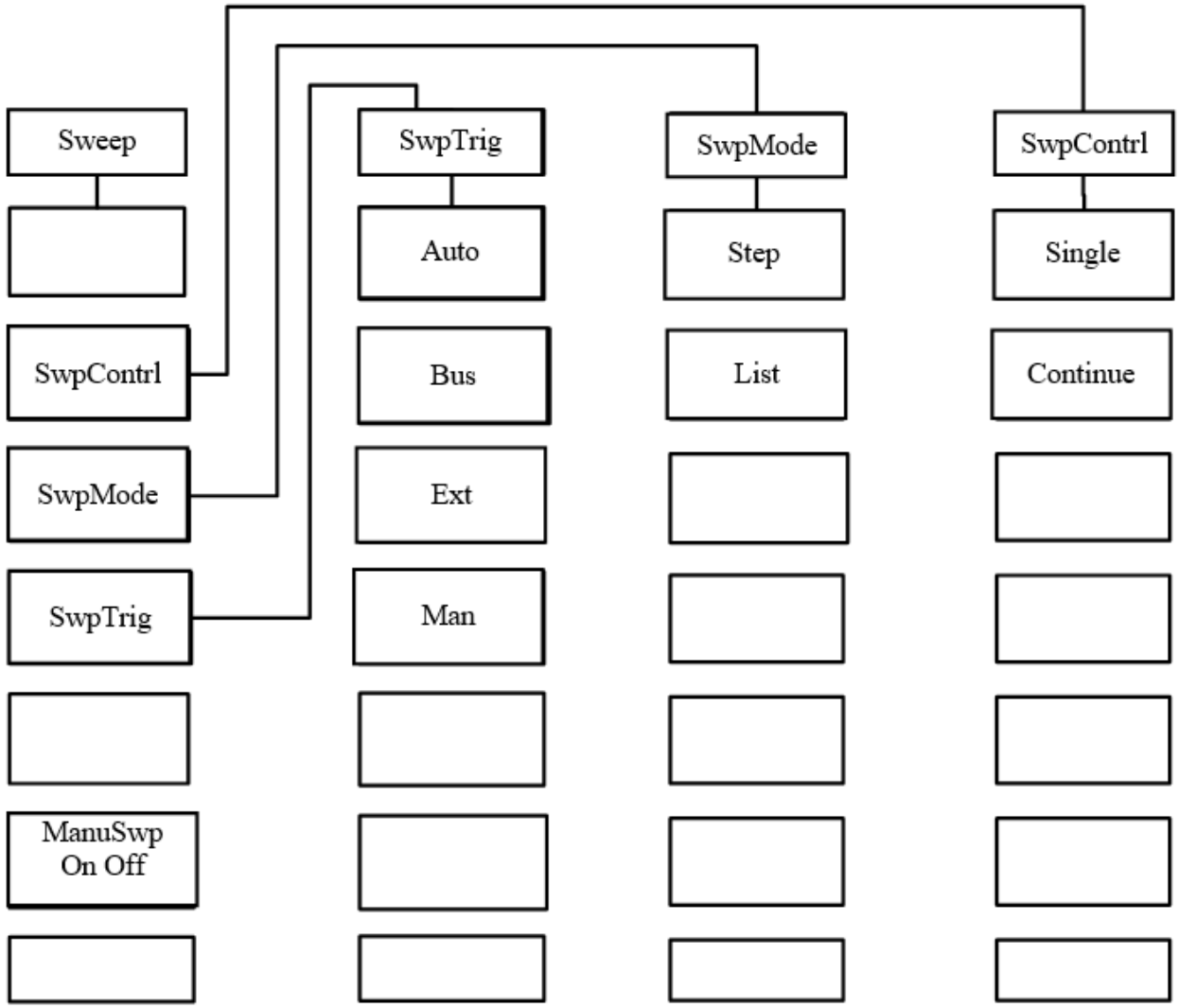

Figure 5-3 Sweep Menu Diagram -2

This signal generator has two sweep modes i.e. step and list. In the step sweep mode, the dwell time for each point can be set and displayed; the left time for each period depends on the selected trigger mode, the number of band switches needed, the time needed for each switch and retrace/setting time. Besides there is a manual sweep mode, in which the sweep position can be adjusted continuously within the preset start/stop sweep range by using the knob on the front panel. The manual sweep mode is unrelated to the step sweep mode or the sweep type that has been selected.

Since this signal generator is only provided with one sweep generator, both frequency sweep and power sweep use the use sweep parameters.

The sweep menu mainly includes: SwpTime Man/Auto, SwpContrl, SwpMode, ManuSwp On/Off, SwpTrig, etc. The followings will introduce them in detail.

- SwpContrl [Single]

It selects the single sweep mode. It terminates the undergoing sweep and starts single sweep.

- SwpContrl [Continue]

It selects the continuous sweep mode.

The highlighted background color of the softkey line indicates the state has been selected. The default setting is [Continue].

- SwpMode [Step]

It activates the step sweep mode.

- SwpMode [List]

It activates the list sweep mode.

- SwpTrig [Auto]

It sets the sweep trigger mode to auto. When the [Single] or [Continue] key under [SwpContrl] is pressed, the instrument triggers sweep automatically.

The highlighted background color of the softkey line indicates the state has been selected. The default setting is [Auto].

- SwpTrig [Bus]

It sets the sweep trigger mode to bus. When the [Single] or [Continue] key under [SwpContrl] is pressed, the instrument will not start sweeping until it receives trigger signal from GP-IB.

- SwpTrig [Ext]

It sets the sweep trigger mode to external trigger. When the [Single] or [Continue] key under [SwpContrl] is pressed, the instrument will not start sweeping until it receives the rising edge trigger signal input by external trigger.

- SwpTrig [Man]

It sets the sweep trigger mode to manual trigger. When the [Single] or [Continue] key under [SwpContrl] is pressed, the instrument will not start sweeping until it receives the rising edge trigger signal input by external trigger.

- ManuSwp [On/Off]

It selects the manual sweep mode. The user can use the knob or up/down keys to control the sweep frequency or power manually.

The highlighted background color of the softkey line indicates the state has been selected. The default setting is [Off].

5.4 Modulation

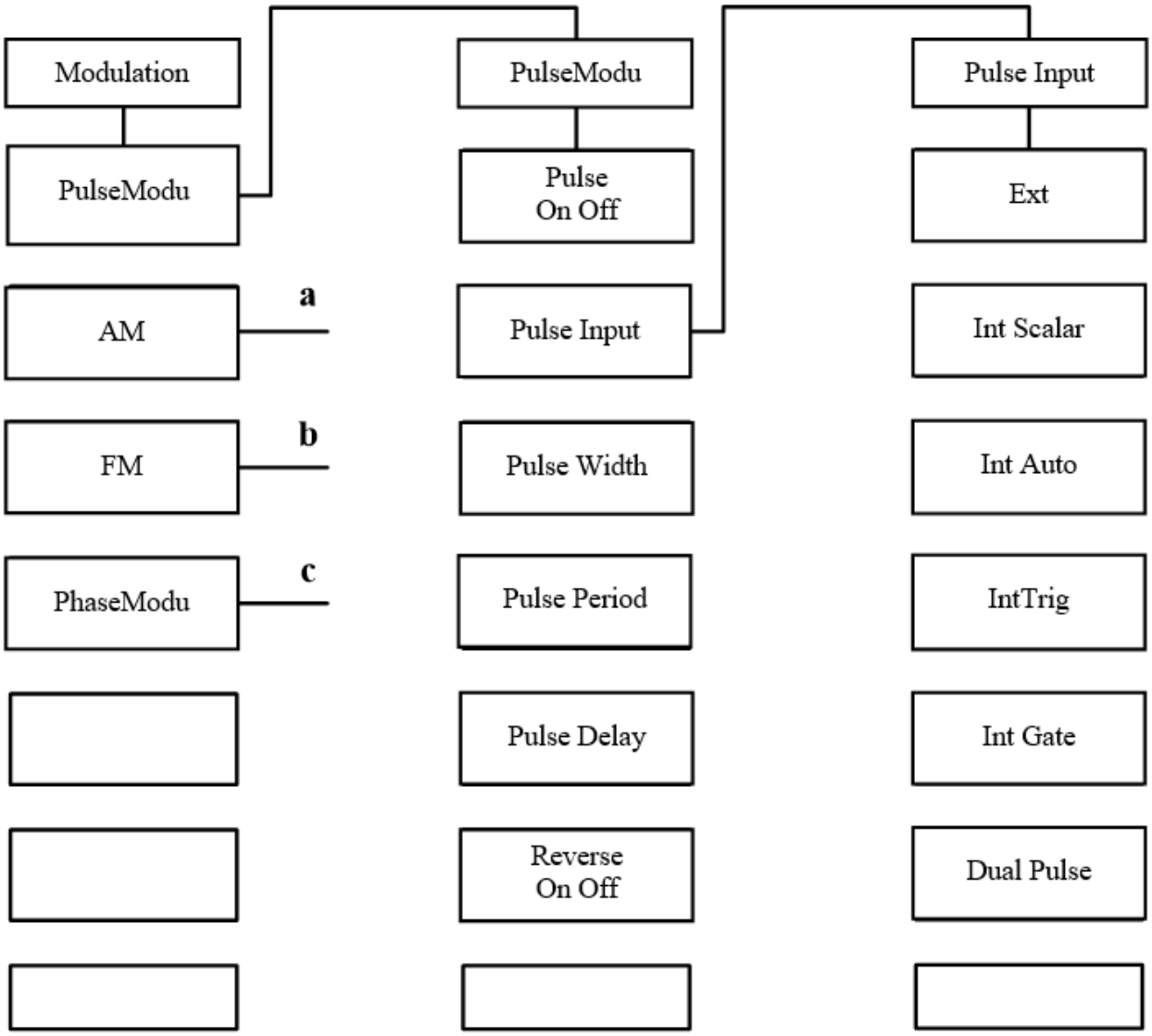

Figure 5-4 Pulse Modulation Menu Diagram

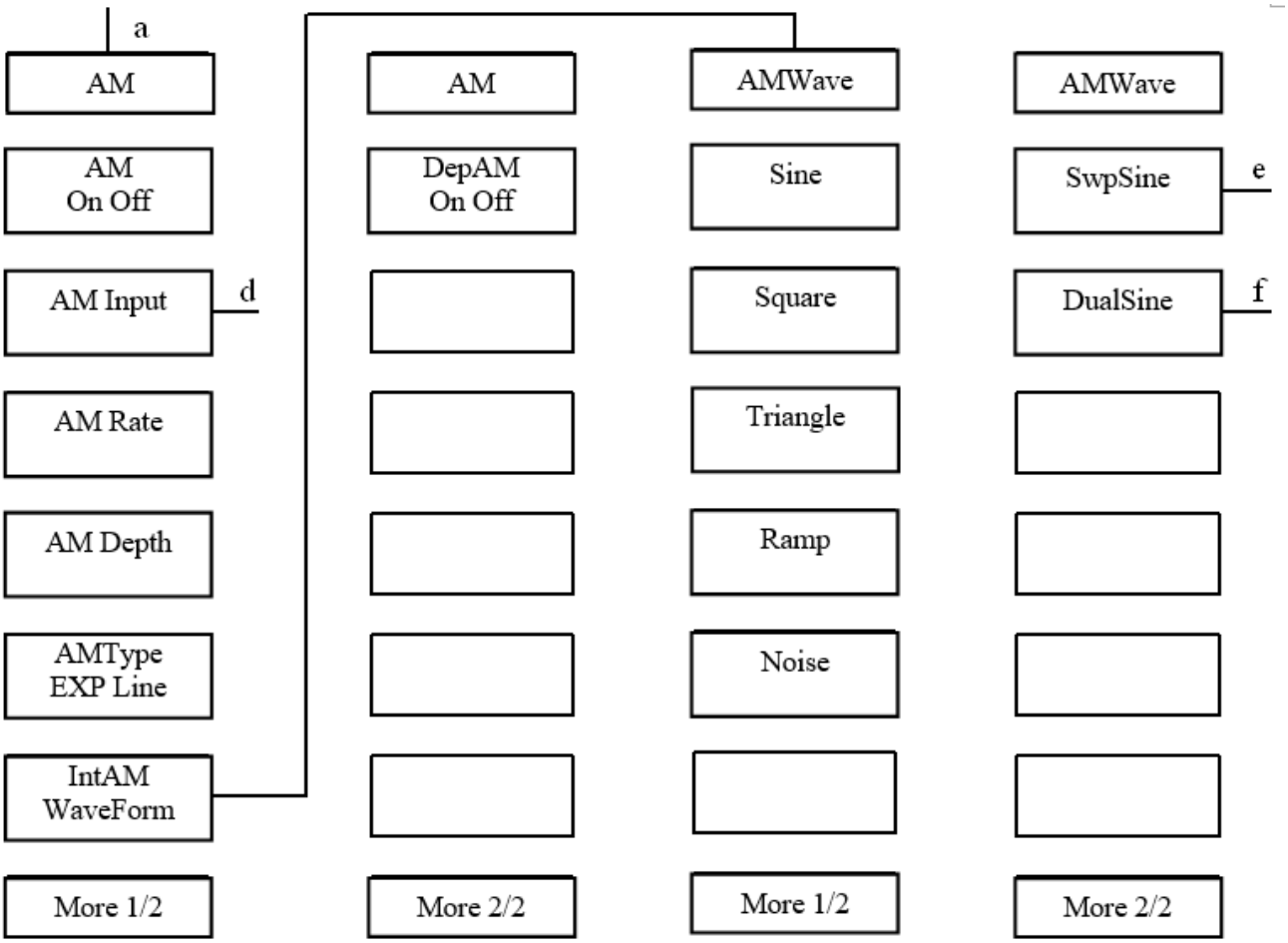

Figure 5-4b Amplitude Modulation Menu Diagram

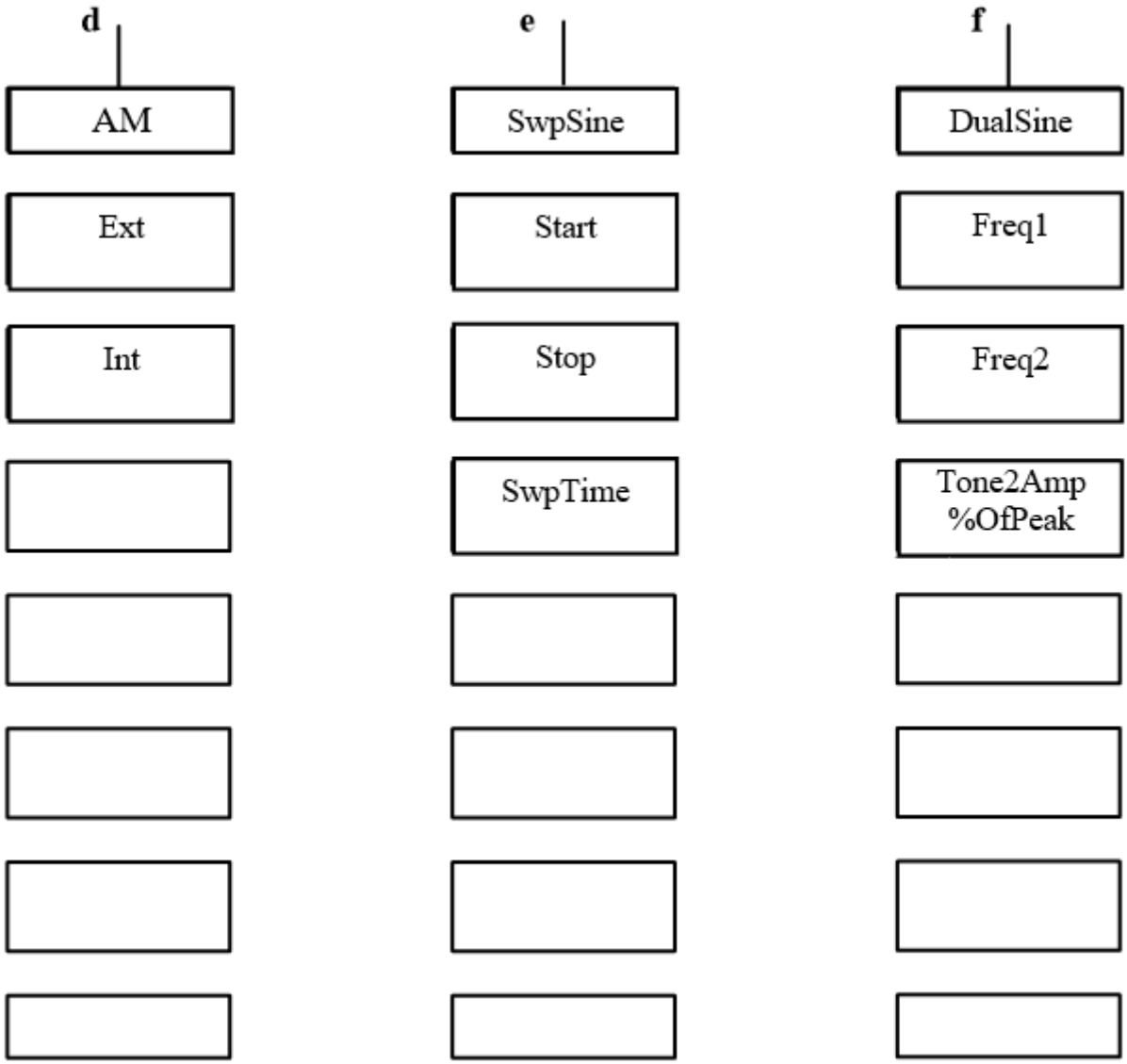

Figure 5-4c Amplitude Modulation Menu Diagram

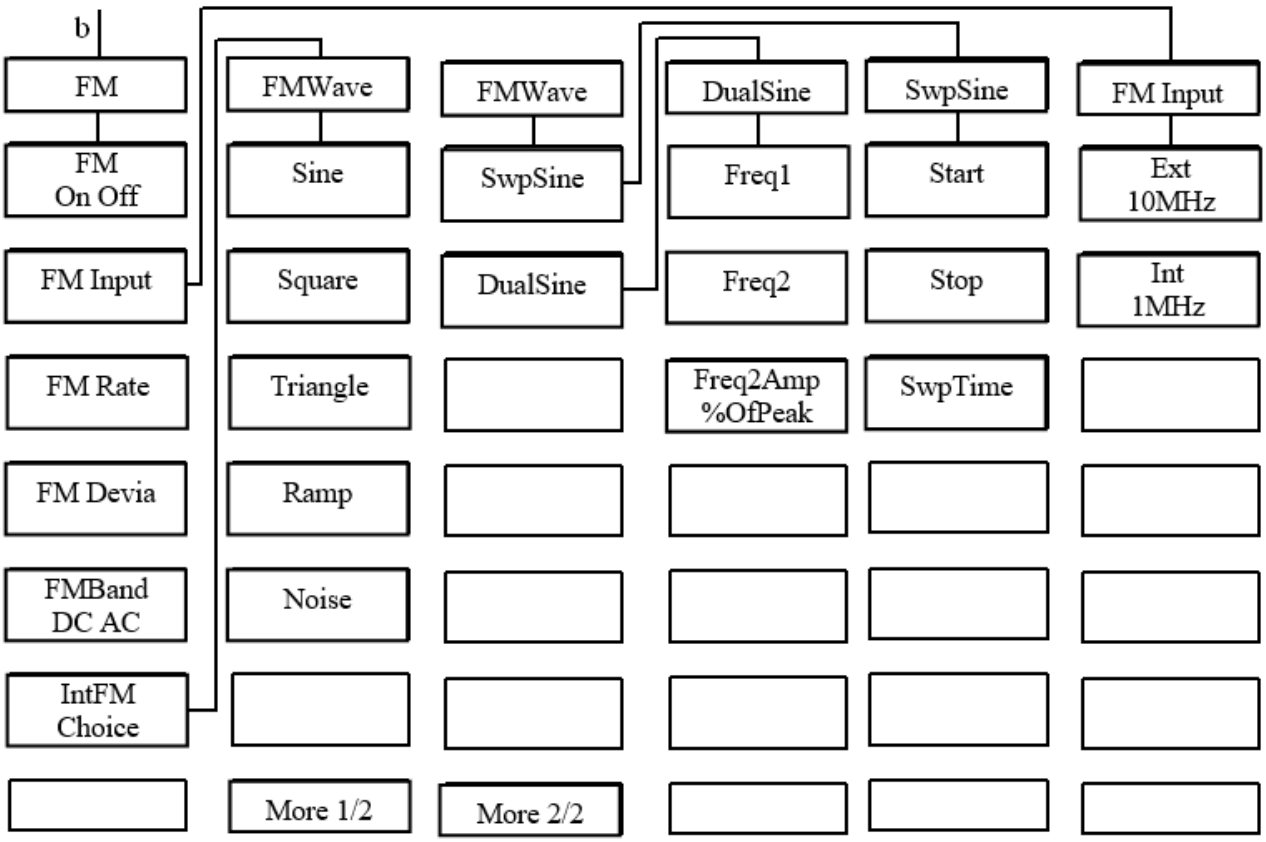

Figure 5-4d Frequency Modulation Menu Diagram

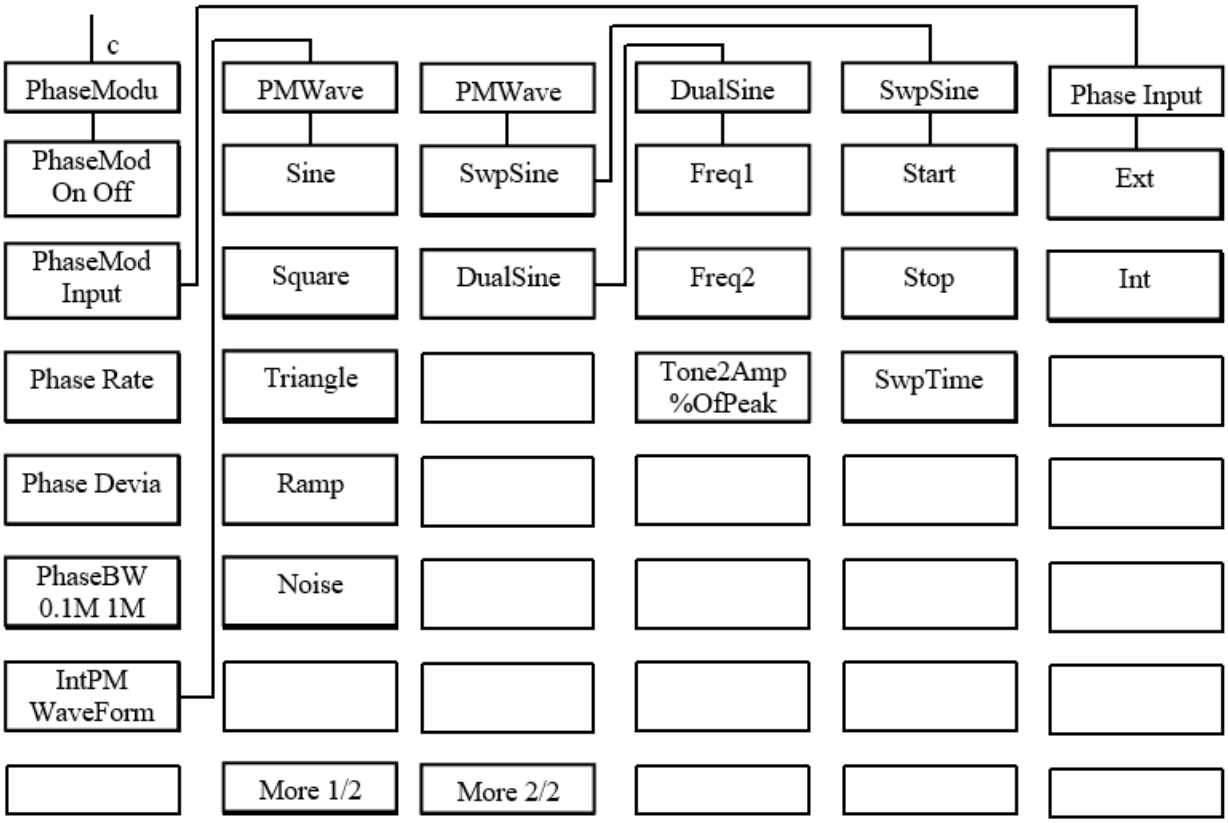

Figure 5-4e Phase Modulation Menu Diagram

For the modulation modes of the signal generator including pulse modulation, amplitude modulation, frequency modulation and phase modulation, user can use the digital and analog switches on the internal modulation signal generator to select internal signals generated by itself or external signals input from front panel (via BNC connector) as the modulation signals.

The modulation menu mainly includes: pulse modulation menu, amplitude modulation menu, frequency modulation menu and phase modulation menu.

- PulseModu [On/Off]

It executes external, internal or scalar pulse modulation function. The parameters of internal pulse generator are set or changed through the modulation menu.

The highlighted background color of the softkey line indicates the state has been selected. The default setting is [Off].

- Pulse Input [Ext]

It uses the pulse source input externally to execute pulse modulation. The modulation pulse source is input through the pulse input connector (BNC connector) on the rear panel and applied to the pulse modulator through the buffer circuit. In pulse modulation, the On (providing set power)/Off (60dB attenuation) of RF output depends on the modulation pulse source that has been input.

- Pulse Input [Int Scalar]

It activates pulse modulation and makes the internal pulse generator of instrument generate 27.8kHz square waves (of 18 ms pulse width and 36ms circle). The rise and fall time of RF envelope is about 0.2 ms. This type pulse is used for AC detection of Scalar Network Analyzer.

- Pulse Input [Int Auto]

It activates pulse modulation and sets the internal pulse generator of instrument as the pulse modulation source, without need of external connection. The pulse parameters are to be set by the user. It also activates internal pulse auto trigger mode, which is non synchronous with other trigger signals.

The highlighted background color of the softkey line indicates the state has been selected. The default setting is [Int Auto].

- Pulse Input [IntTrig]

It sets the pulse delay time of internal pulse generator. It uses the front edge of external pulse input signal to delay the pulse output of internal pulse generator.

- Pulse Input [Int Gate]

It activates the internal pulse gate trigger mode to enable logical summation of the pulse signals input from the internal pulse generator and externally.

- Pulse Input [Dual Pulse]

It activates the mode of dual pulse trigger.

- Pulse Width

It sets the pulse width of internal pulse generator. The pulse width ranges from 40ns to 42s in a step of 20ns. The default pulse width is 50us. When this function is activated, the current pulse width value is displayed.

- Pulse Circle

It sets the output pulse period of internal pulse generator. The pulse period ranges from 100ns to 42s in a step of 20ns. The default pulse period is 100μs. When this function is active, the current value is displayed.

- Pulse Delay

It sets the pulse delay time of internal pulse generator. It uses the front edge of the internal pulse synchronous output signal to delay the pulse output of internal pulse generator. The range is from 0 to 42s. The default is 0. The user can use the navigation keys, number keys or the knob to change the value. When this function is activated, the current value is displayed.

- Reverse [On/Off]

It performs logic inversion on the pulse signals input externally. When this function is active, the RF output +5V is turned off.

The highlighted background color of the softkey line indicates the state has been selected. The default setting is [Off].

- AM

AM includes external amplitude modulation and internal amplitude modulation. It allows the user to set the modulation rate, waveform, frequency and amplitude modulation depth of internal amplitude modulation.

- AM [On/Off]

It executes internal and external amplitude modulation. The parameters of internal amplitude signal are set or changed through the modulation menu.

The highlighted background color of the softkey line indicates the state has been selected. The default setting is [Off].

- AM Input [Ext]

AM signals are input through the external input connector (BNC connector) on the front panel. For external AM, RF output will be modulated by the AM signals input externally. Modulation sensitivity is set by the EXP or Line menu.

- AM Input [Int]

There is no need of external modulation source. In amplitude modulation, the modulation rate is set by the [Int AM] menu.

The highlighted background color of the softkey line indicates the state has been selected. The default setting is [Int].

- AM Rate

It sets the amplitude modulation signal frequency for internal amplitude modulation. When the modulation source is internal, this item can be activated. The user can use navigation keys, number keys or the knob to change its value.

- AM Depth

It sets the amplitude modulation depth for internal amplitude modulation. The user can use navigation keys, number keys or the knob to change its value.

- AMType [Line]

It refers to proportional linear amplitude modulation. The RF output amplitude changes linearly with the amplitude of amplitude modulation signal (or the modulation rate set for internal amplitude modulation).

The highlighted background color of the softkey line indicates the state has been selected. The default setting is [Line].

- AMType [EXP]

It executes exponent amplitude modulation. The RF output amplitude changes exponentially with the amplitude of amplitude modulation signal.

- IntAM WaveForm

In internal amplitude modulation, modulation signals can be set to Sine, Square, Triangle, Ramp, Noise, SwpSine, DualSine, etc. waveforms.

The highlighted background color of the softkey line indicates the state has been selected. The default setting is [Sine].

- AMWave [Sine]

It sets the internal AM wave to sine wave.

The highlighted background color of the softkey line indicates the state has been selected. The default setting is [Sine].

- AMWave [Square]

It sets the internal AM wave to square wave.

- AMWave [Triangle]

It sets the internal AM wave to triangle wave.

- IntAM WaveForm [Ramp]

It sets the internal AM wave to ramp wave.

- AMWave [Noise]

It sets the internal AM wave to noise (white noise: Gaussian distribution around carrier frequency).

- AMWave [SwpSine]

It sets the internal AM wave to swept sine wave.

- AMWave [DualSine]

It sets the internal AM wave to dual sine wave.

- SwpSine [Start]

It sets the start frequency of swept sine wave.

- SwpSine [Stop]

It sets the stop frequency of swept sine wave.

- SwpSine [SwpTime]

It sets the sweep time of swept sine wave.

- DualSine [Freq1]

It sets the value of frequency 1 in dual-sine wave.

- DualSine [Freq2]

It sets the value of frequency 2 in dual-sine wave.

- DualSine [Tone2Amp %OfPeak]

It sets the amplitude percentage of frequency 2 in dual-sine wave.

- DepAM [On/Off]

It selects whether to execute deep amplitude modulation. The highlighted background color of the softkey line indicates the state has been selected. The default setting is [Off].

- FM [On/Off]

It executes the frequency modulation function, including external frequency modulation and internal frequency modulation. It also can set the coupling mode, waveform, modulation rate and modulation deviation of internal frequency modulation.

The highlighted background color of the softkey line indicates the state has been selected. The default setting is [Off].

- FM Input

It executes FM source selection menu.

- FM Input [Ext 10MHz]

It uses externally input signals to modulate frequency. Signals are input through the input connector (BNC connector) on the front panel.

- FM Input [Int 1MHz]

It uses internal signal generator to modulate frequency and need no external modulation signal.

The highlighted background color of the softkey line indicates the state has been selected. The default setting is [Int].

- FM Rate

It sets the modulation signal frequency of internal frequency modulation. Only when the modulation source is internal, this item can be activated. The user can use navigation keys, number keys or the knob to change its value.

- FM Devia

It sets the deviation of frequency modulation, i.e. the amplitude of FM signal. The user can use navigation keys, number keys or the knob to change its value.

- IntFM Choice

In internal frequency modulation, it can set the modulation signal to Sine, Square, Triangle, Ramp, Noise, SwpSine and DualSine, etc. waveforms.

The highlighted background color of the softkey line indicates the state has been selected. The default setting is [Sine].

- IntFM Choice [Sine]

It sets the internal FM wave to sine wave.

The highlighted background color of the softkey line indicates the state has been selected. The default setting is [Sine].

- IntFM Choice [Square]

It sets the internal FM wave to square wave.

- IntFM Choice [Triangle]

It sets the internal FM wave to triangle wave.

- IntFM Choice [Ramp]

It sets the internal FM wave to ramp wave.

- IntFM Choice [Noise]

It sets the internal FM wave to noise (white noise: Gaussian distribution around carrier frequency).

- IntFM Choice [SwpSine]

It sets the internal FM wave to swept-sine wave.

- IntFM Choice [DualSine]

It sets the internal FM wave to dual-sine wave.

- SwpSine [Start]

It sets the start frequency of swept-sine wave.

- SwpSine [Stop]

It sets the stop frequency of swept-sine wave.

- SwpSine [SwpTime]

It sets the sweep time of swept-sine wave.

- DualSine [Freq1]

It sets the value of frequency 1 in dual-sine wave.

- DualSine [Freq2]

It sets the value of frequency 2 in dual-sine wave.

- DualSine [Freq2Amp %OfPeak]

It sets the amplitude percentage of frequency 2 in dual-sine wave.

- PhaseMod [On/Off]

It executes the phase modulation function, including external phase modulation and phase frequency modulation. It also can set the coupling mode, waveform, modulation rate and modulation deviation of internal and external phase modulation.

The highlighted background color of the softkey line indicates the state has been selected. The default setting is [Off].

- PhaseMod Input [Ext]

It uses externally input signals to modulate phase. Signals are input through the input connector (BNC connector) on the front panel. The user can use navigation keys, number keys or the knob to change its value.

- PhaseMod Input [Int]

It uses the internal signal generator to modulate phase and need no external modulation signal.

The highlighted background color of the softkey line indicates the state has been selected. The default setting is [Int].

- Phase Rate

It sets the modulation signal frequency of the internal phase modulation. Only when the modulation source is internal, this item can be activated. The user can use navigation keys, number keys or the knob to change its value.

- Phase Devia

It sets the phase modulation deviation of internal phase modulation, i.e. the amplitude of the phase modulation signal generated by the internal phase modulation signal generator. The user can use navigation keys, number keys or the knob to change its value.

- PhaseBW [0.1M /1M]

It sets the internal phase modulation bandwidth. The highlighted background color of the softkey line indicates the state has been selected. The default setting is [0.1 MHz].

- Int PMWave

In internal phase modulation, it can set the modulation signal to Sine, Square, Triangle, Ramp, Noise, SwpSine and DualSine, etc. waveforms.

- Int PMWave [Sine]

It sets the internal phase modulation wave to sine wave.

The highlighted background color of the softkey line indicates the state has been selected. The default setting is [Sine].

- Int PMWave [Square]

It sets the internal phase modulation wave to square wave.

- Int PMWave [Triangle]

It sets the internal phase modulation wave to triangle wave.

- Int PMWave [Ramp]

It sets the internal phase modulation wave to ramp wave.

- Int PMWave [Noise]

It sets the internal phase modulation wave to noise (white noise: Gaussian distribution around carrier frequency).

- Int PMWave [SwpSine]

It sets the internal phase modulation wave to swept-sine wave.

- Int PMWave [DualSine]

It sets the internal phase modulation wave to dual-sine wave.

- SwpSine [Start]

It sets the start frequency of swept-sine wave.

- SwpSine [Stop]

It sets the stop frequency of swept-sine wave.

- SwpSine [SwpTime]

It sets the sweep time of swept-sine wave.

- DualSine [Freq1]

It sets the value of frequency 1 in dual-sine wave.

- DualSine [Freq2]

It sets the value of frequency 2 in dual-sine wave.

- DualSine [Tone2Amp %OfPeak]

It sets the amplitude percentage of frequency 2 in dual-sine wave.

5.5 I/Q

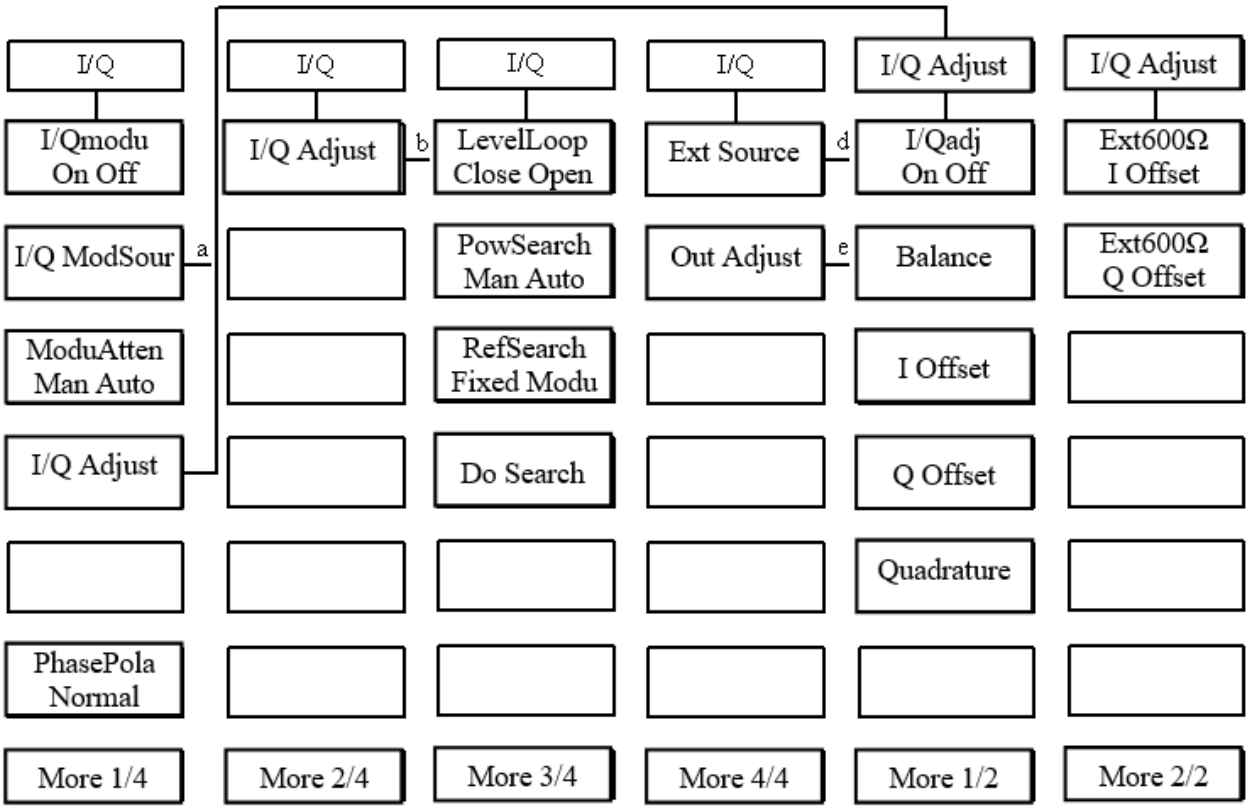

Figure 5-5a I/Q Menu Diagram

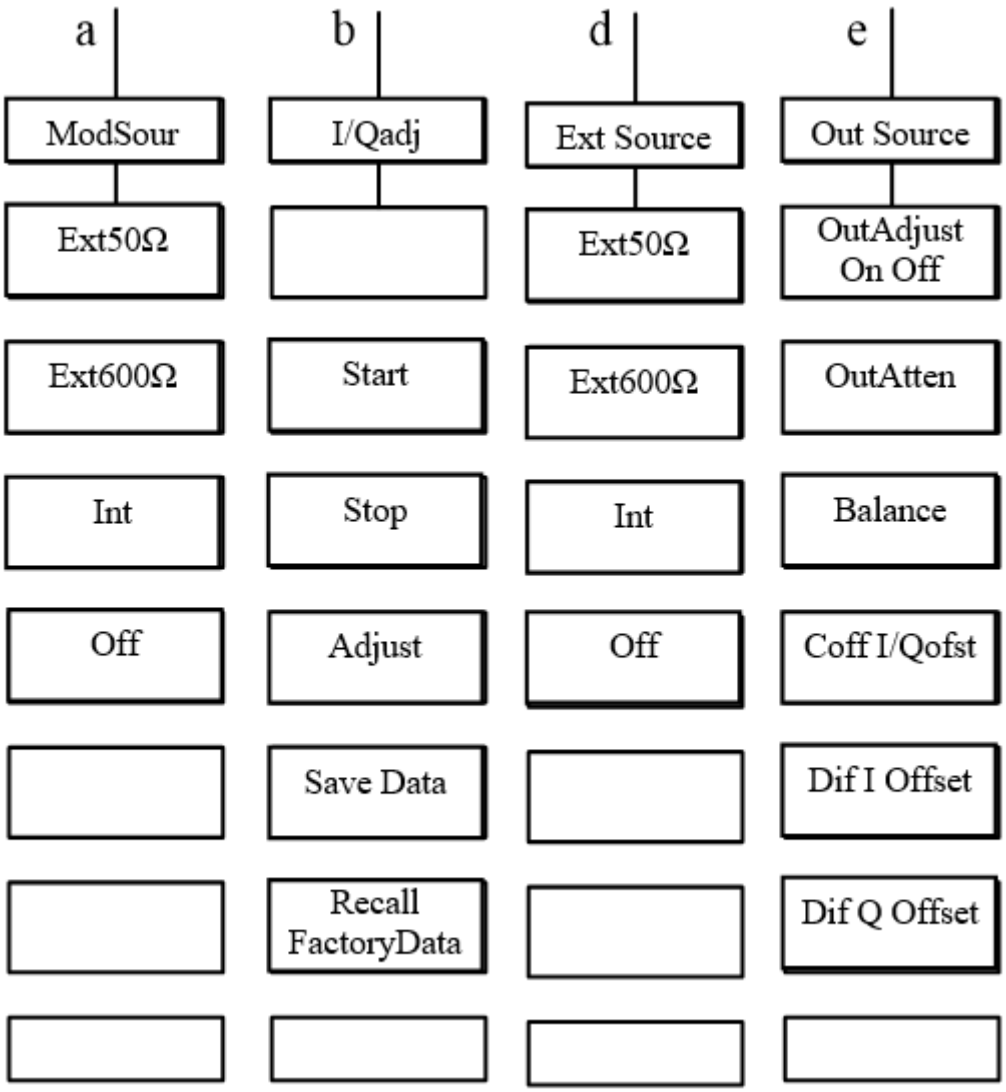

Figure 5-5b I/Q Menu Diagram

I/Q menu includes I/Q modulation switch, I/Q channel setting, I/Q adjust, ALC setting and I/Q output setting.

- I/Qmodu [On/Off]

It executes I/Q modulation. It can also set or change the parameters of I/Q modulation signal through the modulation menu. The highlighted background color of the softkey line indicates the state has been selected. The default setting is [Off].

- I/Q ModSour [Ext50Ω]

It selects external modulation source signal to be sent to internal I/Q modulator at a matched impedance of 50Ω. The highlighted background color of the softkey line indicates the state has been selected.

- I/Q ModSour [Ext600Ω]

It selects external modulation source signal to be sent to internal I/Q modulator at a matched impedance of 600Ω. The highlighted background color of the softkey line indicates the state has been selected.

- I/Q ModSour [Int]

It selects internal modulation source signal to be sent to internal I/Q modulator. The highlighted background color of the softkey line indicates the state has been selected.

- I/Q ModSour [Off]

It turns of I/Q modulation source. The highlighted background color of the softkey line indicates the state has been selected.

- ModuAtten [Man/Auto]

It sets the attenuation type of internal I/Q modulation. Auto attenuation is 6.00 dB and manual adjustment range is from 0.00dB to 40.00 dB.

The highlighted background color of the softkey line indicates the state has been selected. The default setting is [Auto]

- I/Qadj [I/Qadj On Off]

It turns on/off the I/Q adjust function, when it is off, I/Q signal adjustment value is not provided to I and Q signals. When it is on, I/Q balance, I and Q offset voltage and quadrature set are provided to I and Q signals.

- I/Qadj [Balance]

It sets the controlled value of I/Q balance. The user can use navigation keys, number keys or the knob to change its value. The default is 0.00dB. The range is from -4.00dB to +4.00dB.

- I/Qadj [I Offset]

It enters an original offset voltage for the internal in-phase signal. This offset voltage is used to remove the non-ideal or self-calibration damage from the in-phase signal. The allowable range is from -50.00% to 50.00%. The default is 0.00%. The highlighted background color indicates the state has been selected.

- I/Qadj [Q Offset]

It enters an original offset voltage for the internal orthogonal signal. This offset voltage is used to remove the non-ideal or self-calibration damage from the in-phase signal. The allowable range is from -50.00% to 50.00%. The default is 0.00%. The highlighted background color indicates the state has been selected.

- I/Qadj [Quadrature]

It is used to adjust the phase angle between vector I and Q. When the quadrature is 0, the phase angle is 90°, positive deviation makes the angle increase upwards from 90°, and negative deviation makes the angle decrease downwards from 90°. The allowable range is from -10.00deg to +10.00deg. The default is 0.00deg. The highlighted background color indicates the state

has been selected.

- **I/Qadj [Ext600Ω I Offset]**

It is used to enter an original offset voltage for in-phase signal when 600Ω is input externally for matching. The allowable range is from -5.000V to +5.000V. The default is 0.000V. The highlighted background color indicates the state has been selected.

- **I/Qadj [Ext600Ω Q Offset]**

It is used to enter an original offset voltage for orthogonal signal when 600Ω is input externally for matching. The allowable range is from -5.000V to +5.000V. The default is 0.000V.The highlighted background color indicates the state has been selected.

- PhasePola [Normal/Revers]

It is used to reverse I/Q signal and change the rotation direction of vector modulator. The highlighted background color indicates the state has been selected. The default setting is [Normal].

- I/Qadj [Start]

It is used to set the start frequency of I/Q adjust.

- I/Qadj [Stop]

It is used to set the stop frequency of I/Q adjust.

- I/Qadj [Adjust/Cancel]

It is used to execute or cancel I/Q adjust within the range of start frequency and stop frequency.

- I/Qadj [Save Data]

It is used to save adjustment data.

It is used recall factory adjustment data that will become invalid once shut down, and you have to repress the [Save Data] if you want to save.

- LevelLoop [Close/Open]

It is used to set the leveling mode of signal generator. If Close is selected, the signal generator will operate in internal leveling mode that is in normal continuous leveling mode. If Open is selected, ALC internal leveling function will be cancelled. Uncalibrated power is provided through direct control over the internal linear modulator and step attenuator. You can use navigation keys and knob to set the modulator, but will have low power accuracy.

- PowSearch [Man/Auto]

It is used to set the power search mode, and it will only be activated when the leveling loop is open. In the power search period, modulation is turned off (except I/Q) temporarily first until ALC modulator value for correcting RF level is measured (and saved) in the condition of open ALC loop. RF system's gain remains constant, rendering accurate RF level even if there is no closed loop feedback. If Man is selected, every pressing [Do Search] can initiate a power search. If Auto is selected, the signal generator can execute power search automatically at every change of AM, burst, pulse and I/Q adjust mode in the case of power change.

- RefSearch [Fixed/Mod]

It is used to set the power search reference that is used for I/Q adjust. It is recommended to select Modu for the highest power accuracy at I/Q adjust. If Modu is selected, I/Q adjust signal remains active in power search calibration period, and I/Q adjust signal must be stable for normal working, other than pulse or burst. If Fixed is selected, I/Q adjust signal is substituted by 0.5V reference to identify the carrier level. This mode is not very accurate, but very useful if stable (non pulse) I/Q signal is unavailable.

- Do Search

It will only be activated when the power search is Man. Every pressing it can initiate a power search.

- **Ext Source [Ext50Ω]**

It selects external output source of 50Ω impedance to match external modulation source. The highlighted background color of the softkey line indicates the state has been selected.

- **Ext Source [Ext600Ω]**

It selects external output source of 6000Ω impedance to match external modulation source. The highlighted background color of the softkey line indicates the state has been selected.

- Ext Source [Int]

It selects external output source as the internal modulation source. The highlighted background color of the softkey line indicates the state has been selected.

- Ext Source [Off]

It selects external output source as Off. The highlighted background color of the softkey line indicates the state has been selected.

- Out Source [OutAdjust On/Off]

It executes the settings concerning related parameters to output adjustment, if Off is selected, the adjustment function is turned off, signal adjusted value will not be provided to I and Q signal. If On is selected, the adjustment function is turned on, the set values of output attenuation, balance, I and Q offset voltage will be provided to I and Q signal.

- Out Source [OutAtten]

It is used to set the attenuation level of external output I and Q signals on the rear panel. The default is 6.00 dB and adjustment range is from 0.00dB to 40.00dB.

- Out Source [Balance]

It sets the controlled value of external output drive signal I/Q gain balance. The user can use navigation keys, number keys or the knob to change its value. The allowable range is from -4.00dB to +4.00dB. The default is 0.00dB.

- Out Source [Coff I/Qofst]

It is used to adjust the original offset voltage of I/Q that will be sent to external output port for adjusting the output signal level of I, /I, Q, /Q to ground equally.

- Out Source [Dif I Offset]

It adjusts the differential offset voltage of in-phase signal sent to external output connector.

- Out Source [Dif Q Offset]

It adjusts the differential offset voltage of orthogonal signal sent to external output connector.

5.6 System

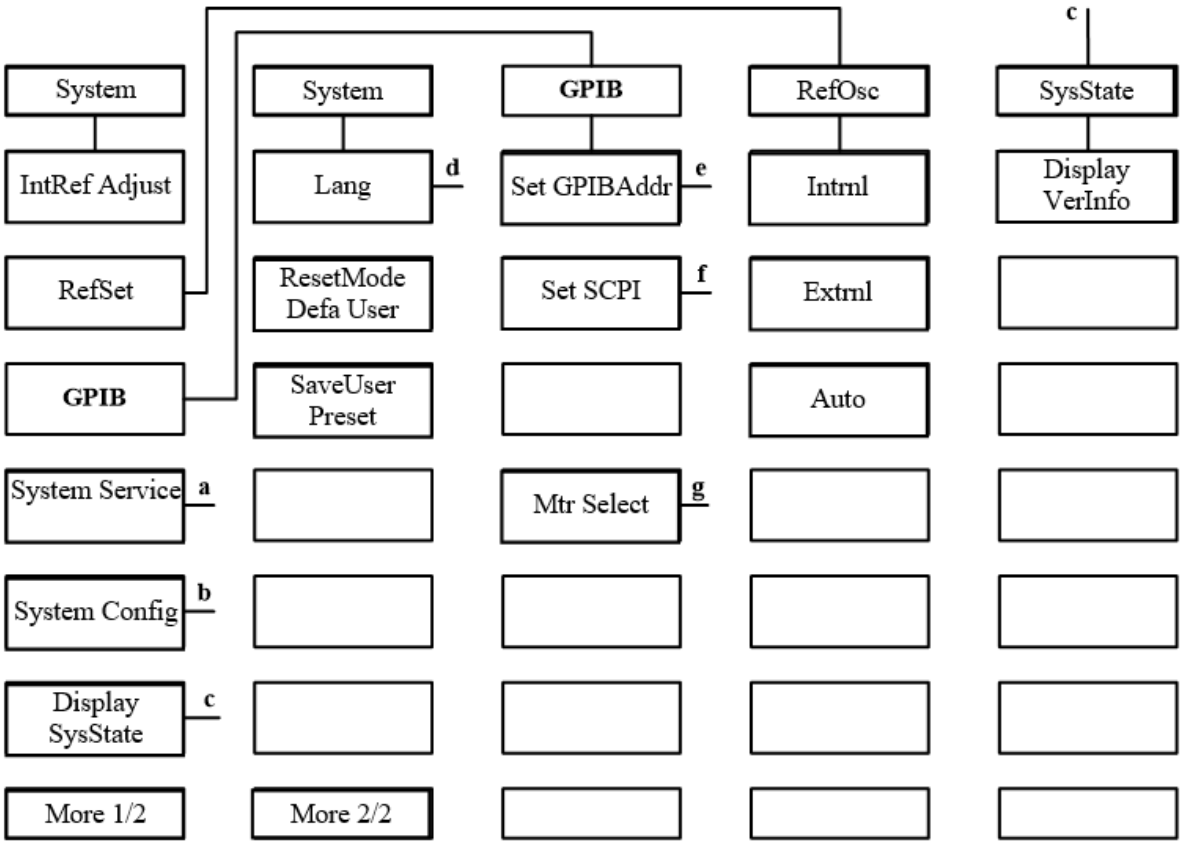

Figure 5-6a System Menu Diagram

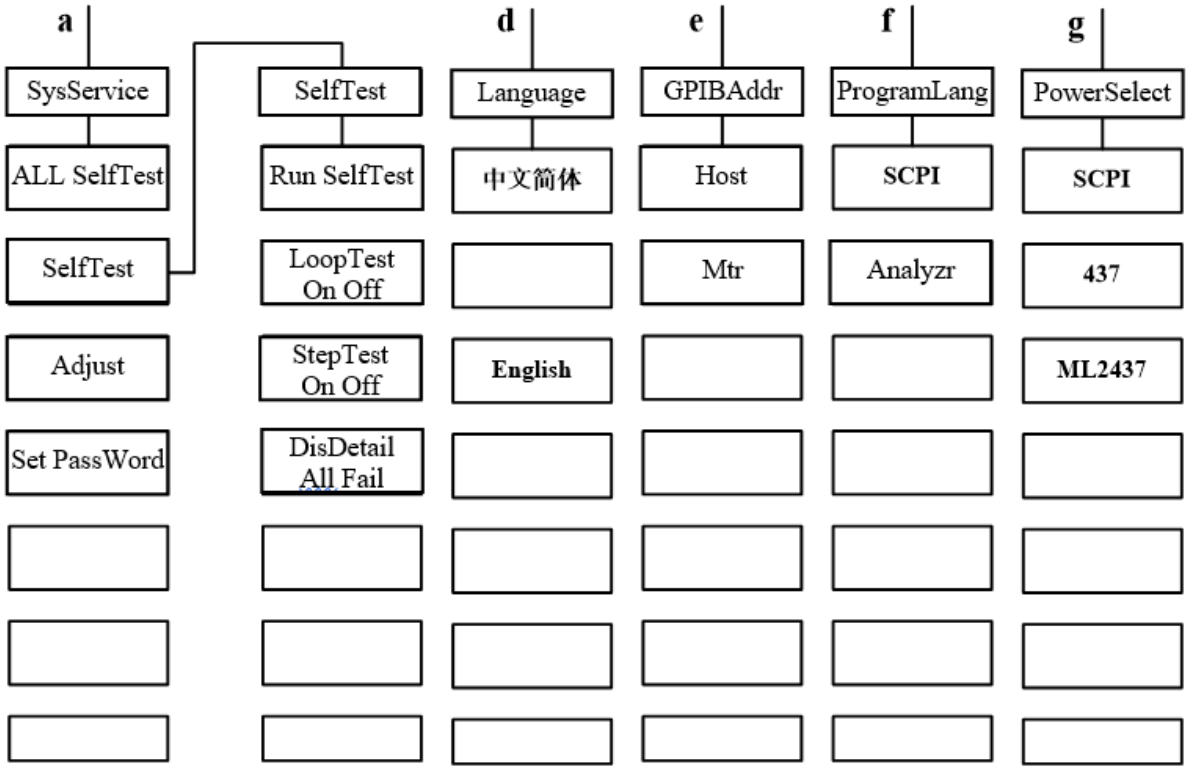

Figure 5-6b System Menu Diagram

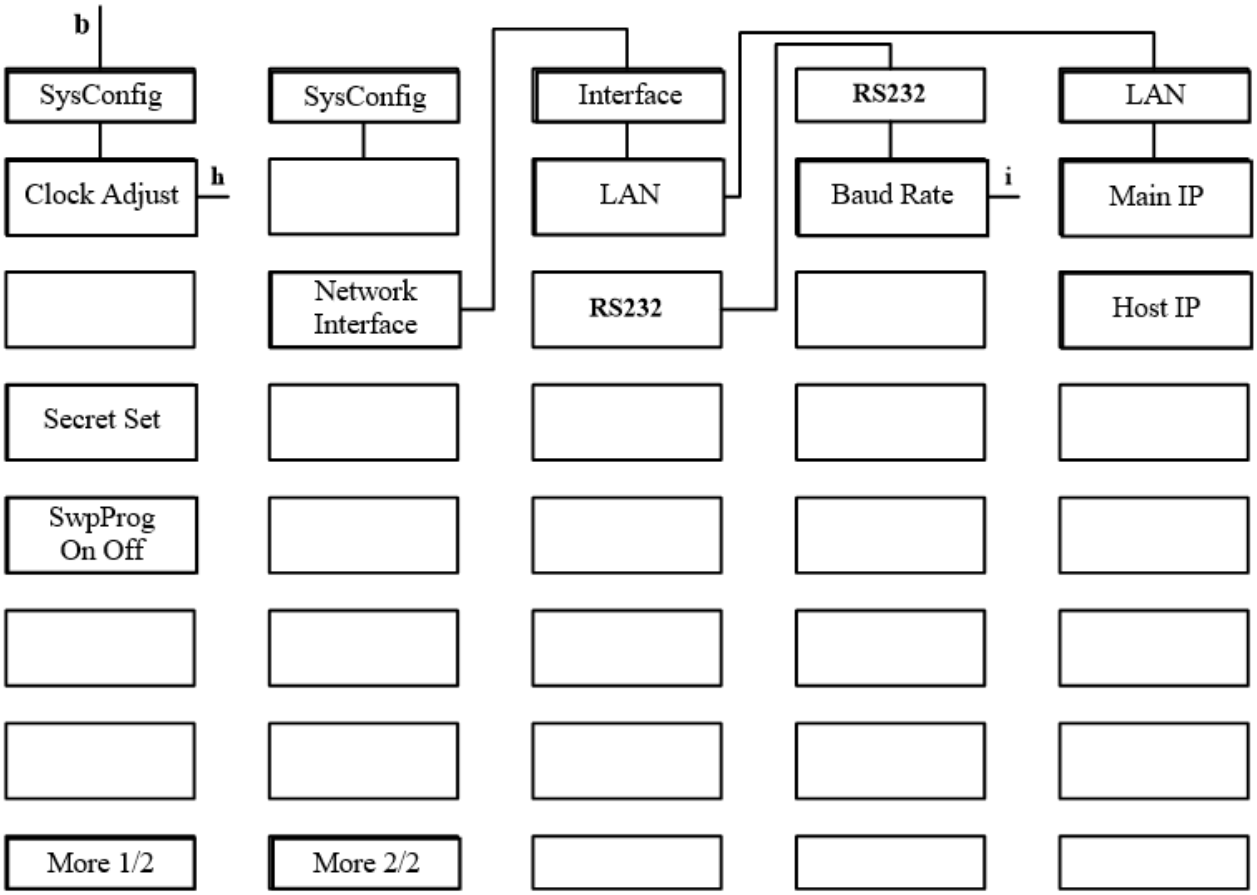

Figure 5-6c System Menu Diagram

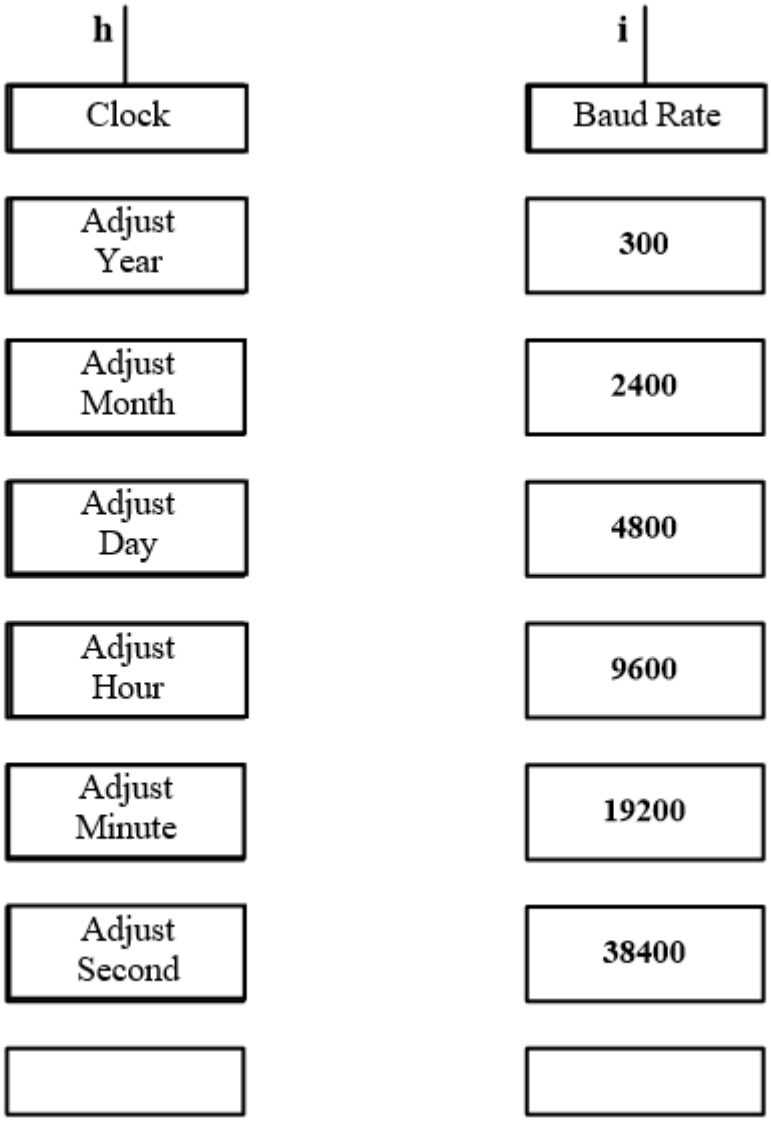

Figure 5-6d System Menu Diagram

The system menu mainly includes: IntRef Adjust, RefSet, GP-IB, System Service, System Config, Display SysState, File Management, Lang, ResetMode Defa User, SaveUser Preset, etc. Their functions are described as follows:

- IntRef Adjust

It adjusts internal reference accuracy. It is used to adjust the accuracy of the internal reference used by the system.

- RefSet

It executes the reference selection menu. It is used to determine the frequency reference used by the system.

- RefOsc [Intrnl]

It selects the internal 10MHz Oscillator as the frequency reference of instrument.

- RefOsc [Extrnl]

It selects the external 10MHz signal as the frequency reference of instrument. The external signal must be input from the 10MHz reference input connector (BNC connector) on the rear panel.

- RefOsc [Auto]

The instrument automatically selects its frequency reference. If there is external frequency reference, the instrument will select it as frequency reference. If there is no external frequency reference, the instrument will select the internal reference as frequency reference.

The highlighted background color of the softkey line indicates the state has been selected. The default setting is [Auto].

- GP-IB

It sets GP-IB parameters.

- Set GPIBAddr [Host]

It controls the GP-IB address of the signal generator from 0 to 30. This setting cannot be saved and will be lost once reset or shut down. The default setting is 19.

- Set GPIBAddr [Mtr]

It controls the GP-IB address from 0 to 30. This setting cannot be saved and will be lost once reset or shut down. The default setting is 13.

- ProgramLang [SCPI]

It selects SCPI as the external interface language of the instrument.

- ProgramLang [Analyzr]

It selects the analyzer language as the external interface language of the instrument.

- PowerSelect

It is used to select the program language of power meter.

- PowerSelect [SCPI]

It selects the power meter that can be controlled in program by SCPI language to perform control operations in respect of power.

- System Service

It executes the system service menu.

- SysService [ALL SelfTest]

It executes all self tests of the instrument.

- SysService [SelfTest]

It executes the self test menu items selected by user.

- Self-test [Run SelfTest]

It performs the self test item selected by user, i.e. by the current indication bar.

- Self-test [LoopTest On/Off]

It turns on/off loop test on the user selected self test. When it is on, the self test will cycle on and on until the user terminates it.

The highlighted background color of the menu indicates the state has been selected. The default setting is [Off].

- Self-test [StepTest On/Off]

It turns on/off the user selected self test item and displays specific test data during the test.

The highlighted background color of the menu indicates the state has been selected. The default setting is [Off].

- Self-test [DisDetail All/Fail]

It displays all test data or the failed test data during the self test.

The highlighted background color of the menu indicates the state has been selected. The default setting is [All].

- Set PassWord

It sets or changes the password to enter the adjustment menu.

- System Config

It sets system parameters.

- Clock Adjust

It can change the year, month, day, hour, minute and second of the current data displayed on the instrument.

- SwpProg [On/Off]

It turns on/off sweep indication.

The highlighted background color of the menu indicates the state has been selected. The default setting is [Off].

- Network Interface [LAN]

It selects to execute LAN configuration menu.

- LAN [Main IP]

It sets the main machine IP.

- LAN [Host IP]

It sets the host IP.

- Network Interface [RS232]

It selects to execute RS232 interface configuration menu.

- RS232 [Baud Rate]

It executes the baud rate menu of interface RS232. The baud rate can be set to 300, 2400, 4800, 9600, 19200 or 38400.

- Display SysState

It executes the display setting menu for system state selection.

- Display SysState [Display VerInfo]

It selects system version.

- Language [**中文简体**/English]

It sets the parameters of display language.

The highlighted background color of the menu indicates the state has been selected. The default setting is [中文].

- ResetMode [Defa User]

It resets the signal generator to the initial state defined by factory.

The highlighted background color of the softkey line indicates the state has been selected. The default setting is [Defa].

- ResetMode [User]

It resets the signal generator to the initial state defined by user.

- SaveUser Preset

It saves the current state of instrument into the user reset state register.

5.7 Baseband

This part is only applicable to the instrument provided with internal baseband signal generator option.

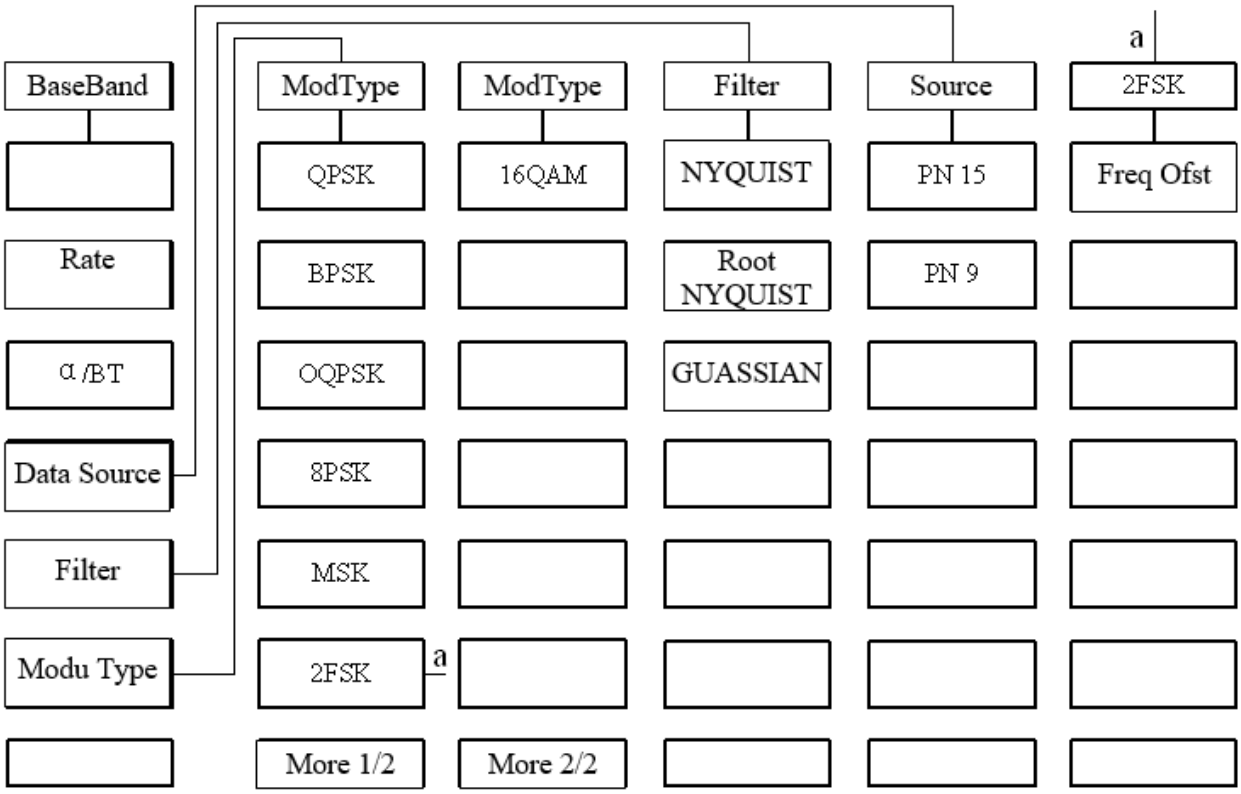

The baseband key provided in internal baseband signal generator can set the parameters including: rate, α/BT, Data Source, Filter and Mod Type. All currently set parameters are displayed in the message area.

- Rate

It is used to set a new rate. Press it to display the current rate.

- **α/BT**

It is used to set the parameter of a new filter. Press it to display the current parameter of filter.

- Data Source

It executes the data source menu. It is used to select the generation mode of data for digital modulation.

- PN15

It sets or changes the stream of bits for digital modulation to be generated by internal standard 15-bit pseudo-random sequence generator.

- PN9

It sets or changes the stream of bits for digital modulation to be generated by internal standard 9-bit pseudo-random sequence generator.

- Filter

It executes the filter menu. It is used to select the type of baseband filter.

- NYQUIST

It sets or changes the type of baseband filter to NYQUIST (raised cosine) filter.

- Root NYQUIST

It sets or changes the type of baseband filter to Root NYQUIST (root raised cosine) filter.

- GUASSIAN

It sets or changes the type of baseband filter to GUASSIAN filter.

- ModType

It executes the modulation type menu. It is used to select the type of digital modulation.

- QPSK

It sets or changes the digital modulation type to Quaternary Phase Shift Keying (QPSK). The type QPSK transmits 2 bits data per code element.

- BPSK

It sets or changes the digital modulation type to Binary Phase Shift Keying (BPSK). The type BPSK transmits 1 bit data per code element.

- OQPSK

It sets or changes the digital modulation type to Offset Quaternary Phase Shift Keying (OQPSK). The type OQPSK transmits 2 bits data per code element.

- 8PSK

It sets or changes the digital modulation type to 8 Phase Shift Keying (8PSK). The type 8PSK transmits 3 bits data per code element.

- MSK

It sets or changes the digital modulation type to Minimum Shift Keying (MSK). The type MSK transmits 1 bit data per code element.

- 2FSK

It sets or changes the digital modulation type to 2 Frequency Shift Keying (2FSK). The type 2FSK transmits 1 bit data per code element.

- Freq Ofst

It is used to set the frequency offset of a new 2FSK modulation. Press it to display the current frequency offset.

- 16QAM

It sets or changes the digital modulation type to 1 6Quadrature Amplitude Modulation (16QAM). The type 16QAM transmits 4 bits data per code element.

6 Hardware Architecture

As shown in Figure 8-1, S1101 Radio Frequency Signal Generator is composed of frequency synthesis unit, RF signal generation and conditioning unit, RF drive and modulation unit, baseband signal generation and conditioning unit, CPU and interface control, power supply and display, etc.

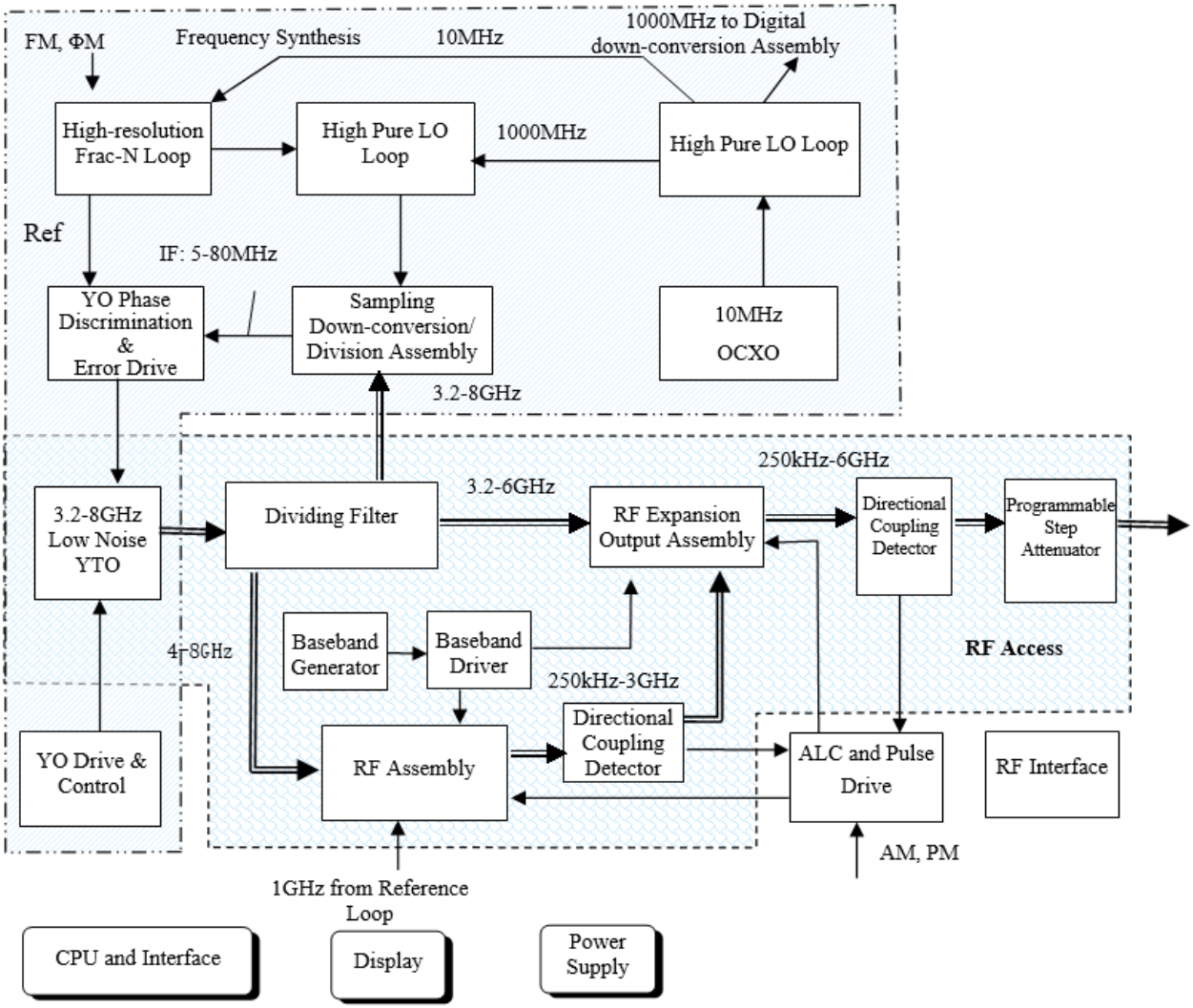

Figure 6-1 Schematic Diagram of Whole Machine Operating Principle

CPU panel is responsible for realizing all the control functions of the signal generator. CPU panel receives the commands from the keyboard on the front panel and the LAN, GP-IB interface and RS-232 serial port on the rear panel and then converts them into the setting of instrument state via internal bus. At the same time, the CPU panel also can detect the internal circuit state of the instrument and display it on the display of the front panel, such as out of lock, unstable amplitude, etc. The display of the front panel uses large color liquid crystal display to display the setting and state information of the instrument.

3GHz~10GHz microwave signals are generated by YIG oscillator, and 3.2GHz~8GHz low-noise frequency synthesis signals are generated by the frequency synthesis part. Such signals are divided at 2, 4, 8 and 16 ratio by the RF divider in dividing filter and then output as 250MHz~3.2GHz, in the meanwhile, the signals in the frequency range of 3.2GHz~6GHz directly enter the RF expansion output assembly. 250kHz~250MHz signals are realized by mixing that are mixed by combining 750MHz~1GHz signals after dividing at 8 ratio and the 1GHz LO signals from reference loop. 250kHz~3.2GHz signals then enter the RF expansion output assembly to combine with the signals in the frequency range of 3.2GHz~6GHz to form output signals of the

same kind.

The indexes of frequency stability and accuracy are fulfilled by the frequency synthesis part, which includes high-performance reference loop, high-resolution frac-N loop, high pure LO loop, sampling frequency conversion, YO phase discrimination and error drive. CPU firstly uses the preset DAC on the YO drive to roughly set the output frequency of the YIG oscillator. The high pure LO loop samples and converts GHz microwave signals output by the YIG oscillator to 10MHz IF signals without distortion. The error voltage obtained by comparing the frequency/phase of IF signals with the high-resolution signals output by the frac-N loop is used to adjust the output of the YIG oscillator accurately and lock it on the assigned frequency.

The power control and amplitude modulation of the whole machine are composed of two ALC loops. The coupling detector couples a small part of RF output signals and converts them into corresponding DC voltage. The error voltage obtained by comparing the voltage with the reference voltage of the ALC loop panel obtains is used to drive the linear modulator in frequency converter to adjust the RF power until the detected voltage is equal to the reference voltage so as to realize power control.

The amplitude modulation and pulse modulation of the whole machine are realized by the RF part and ALC loop respectively. The frequency modulation and phase modulation are realized in the Frequency Synthesis.

The vector modulation function is realized respectively in the digital down-conversion and RF expansion output assemblies.

7 Main Technical Specifications

S1101 Radio Frequency Signal Generator meets all performance indexes when it has been kept for 2 hours at ambient temperature and warmed up for 30 minutes and has the attenuator set operating mode automatically (or internal stable amplitude level of more than-5dBm). The supplemental performances given by means of typical values are for users' reference not for evaluation. Refer to the following for the basic performance characteristics and technical specifications.

Please refer to Appendix 1 S1101 RF Signal Generator Datasheet for the full specifications.

8 Trouble Shooting

8.1 Error Messages

This chapter will introduce how to discover fault point. It also includes explanation of the internal error messages of signal generator.

If you have purchased S1101 RF Signal Generator and encountered some questions during operation or you need to buy the components, options or accessories related to the signal generator, Saluki will provide you perfect after-sales service.

Problems usually come from hardware, software or user's improper use. Please contact us promptly once there is any problem. If your signal generator is still under warranty, we will repair your signal generator freely. And if it is beyond warranty, we will only charge the cost price.

Attention

This part will guide you how to judge and handle simply in the case of fault in S1101 RF Signal Generator. If necessary, please return your problems to Saluki as much accurately as possible so that we could resolve them as soon as possible.

8.1.1 The indicator is unlit.

Check if the signal generator has a normal 220V AC input whose maximum permissible deviation is 220V±10%. It is possible to cause the instrument not to operate normally when it is too high or too low. If 220V AC input is normal, check the instrument fuse which can be replaced. If it still now work, please return it to Saluki for repair or replacement of the power supply.

8.1.2 Fan does not work at start-up

If the fan does not work at startup, please check if there is any barrier or too much dust. If so, turn off the instrument to remove the barrier or clean the fan. Then power the instrument on to restart it, if the fan still does not work, please return it to Saluki for repair or replacement.

8.1.3 Reference loop out of lock

The "Reference Loop out of lock" appears on the alarm instruction area of the display screen. If the signal generator is started from a non-standby state, i.e. cold start-up, a transitory reference loop out of lock is possible, at that time you can ignore it, the alarm information should disappear in around 10 minutes after startup of the instrument, if not, it is a failure. Please proceed as follows in the case of failure:

【System】

[SysService]

[SelfTest] 50 Press【Any Unit Key】

[Run SelfTest]

Find and select failed self-test with UP/Down keys and then continue to proceed as follows:

[StepTest *On* Off]

[DispDetail *All* Fail]

[Run SelfTest]

If a self-test contains several steps, please press [Continue] until this self-test is completed.

Please record the result at every step in detail and then contact and provide the test result to Saluki.

8.1.4 LO out of lock

If "LO out of lock" appears on the alarm instruction area of the display screen, please process as follows:

【System】

[SysService]

[SelfTest] 130 Press【Any Unit Key】

[Run SelfTest]

Find and select failed self-test with UP/DOWN keys, and then continue to proceed as follows:

[StepTest *On* Off]

[DispDetail *All* Fail]

[Run SelfTest]

If a self-test contains several steps, please press [Continue] until this self test is completed.

Please record the result at every step in detail and then contact and provide the test result to Saluki.

8.1.5 YO out of lock

If "YO out of lock" appears on the alarm instruction area of the display screen, please process as follows:

【System】

[SysService]

[SelfTest] 170 Press【Any Unit Key】

[Run SelfTest]

Find and select failed self-test with UP/DOWN arrows, and then continue to proceed as follows:

[StepTest *On* Off]

[DispDetail *All* Fail]

[Run SelfTest]

If a self-test contains several steps, please press [Continue] until this self-test is completed.

Please record the result at every step in detail and then contact and provide the test result to Saluki.

Attention

LO out of lock will cause YO out of lock, so please first resolve LO out of lock and then check if YO is out of lock when they appear at the same time.

8.1.6 Unstable Amplitude

Attention

When the power level of signal generator is set to going beyond the range of index, the instruction "Unstable Amplitude" is possible but which is normal and only to prompt the user that the current output power of signal generator is not stable.

"Unstable Amplitude" appears in the alarm instruction area of the display, please proceed as follows:

【System】

[SysService]

[SelfTest] 460 Press【Any Unit Key】

[Run SelfTest]

Find and select failed self-test with UP/DOWN keys and then continue to proceed as follows:

[StepTest *On* Off]

[DispDetail *All* Fail]

[Run SelfTest]

If any self-test contains several steps, please press [Continue] until this self-test is completed.

Please record the measurement at every step in detail and contact Saluki by the information in the Preface.

Attention

In addition, if there is no display when the instrument is started while the power indicator works well, transportation may do some damage inner the instrument, please to return the instrument directly to Saluki for repair or replace

9 Appendix A: Datasheet

S1101 Series RF Signal Generator

(250kHz - 6GHz/3GHz)

Datasheet

Saluki Technology Inc.

The document applies to the S1101 RF signal generators of the following models:

- S1101A RF signal generator (250kHz-6GHz).
- S1101B RF signal generator (250kHz-3GHz).

Standard pack and accessories

- Main Machine
- Power Cord
- User Manual

Options of the S1101 series RF signal generator in addition to standard accessories:

- S1101-001, 115dB programmable step attenuator stepping by 5dB.
- S1101-002, Vector modulation module. Need option S1101-003.
- S1101-003, base-band signal generator, need option S1101-002
- S1101-005, aluminum case.
- S1101-006, Cabinet installation kit

Preface

Thank you for choosing S1101 RF signal generator produced by Saluki Technology Inc.

We devote ourselves to meeting your demands, providing you high-quality measuring instrument and the best after-sales service. We persist with “superior quality and considerate service”, and are committed to offering satisfactory products and service for our clients.

Document No.

S1101-02-01

Version

Rev01 2016.11

Saluki Technology

Document Authorization

The information contained in this document is subject to change without notice. The power to interpret the contents of and terms used in this document rests with Saluki.

Product Quality Assurance

The warranty period of the product is 36 months from the date of delivery. The instrument manufacturer will repair or replace damaged parts according to the actual situation within the warranty period.

Product Quality Certificate

The product meets the indicator requirements of the document at the time of delivery. Calibration and measurement are completed by the measuring organization with qualifications specified by the state, and relevant data are provided for reference.

Quality/Settings Management

Research, development, manufacturing and testing of the product comply with the requirements of the quality and environmental management system.

Contacts

Service Tel:	886.2.2175 2930
Website:	www.salukitec.com
Email:	info@salukitec.com
Address:	No. 367 Fuxing N Road, Taipei 105， Taiwan (R.O.C.)

Content

1. Overview

S1101 series RF signal generator covers a frequency range from 250 kHz to 6 GHz / 3 GHz. S1101 provides extremely low phase noise, accuracy frequency resolution, wide output dynamic range, and multiple built-in functions. it is widely used for R&D, education, electronic device

1. 1. Definitions

Specification (Spec.)

Specifications describe the performance of parameters within the warranty of the instrument. Product specifications applies under the following conditions:

1) Two hours storage at ambient temperature(0-40℃) followed by 30 minutes warm-up operation
2) Specified environmental conditions met
3) Instrument is within its calibration cycle.
4) The specification listed in the datasheet includes measurement uncertainties.

Data in this document are Spec. unless otherwise noted.

Typical (typ.)

Typical data is not guaranteed by instrument warranty. It describes additional product performance information that 80 percent of the units exhibit. Typical data only valid at 25℃. Typical performance does not include measurement uncertainty.

Nominal(nom.)

Nominal values indicate expected performance, or describe product performance that is useful in the application of the product, but are not covered by the product warranty.

2. Specifications

2. 1. Frequency & Sweep

2. 1. 1. Frequency Range

Model	Frequency Range
S1101A	250kHz - 3GHz
S1101B	250kHz - 6GHz

2. 1. 2. Frequency Resolution

Frequency Resolution	0.01Hz (settable to 0.001Hz)

2. 1. 3. Frequency Band (Nom.)

Band	N	Frequency Range
1	1	250kHz≤f≤250MHz
2	1/2	250MHz≤f≤500MHz
3	1	500MHz≤f≤1GHz
4	2	1GHz≤f≤2GHz
5	4	2GHz≤f≤3.2GHz
6	8	3.2GHz≤f≤6GHz

2. 1. 4. CW Switching Speed

Frequency Switching Time	<50ms

2. 1. 5. Aging Rate

Timebase Aging Rate (Typ.)	1 x 10^{-9} /day (powered 7days or more)

2. 1. 6. Sweep Mode

Sweep Modes	Step Sweep / List Sweep /
List Sweep Point	2 - 1601
Dwell Time	1ms - 60s

2. 1. 7. Trigger

Triggering	Auto, external, single, or GPIB

2. 1. 8. Residual FM

Residual FM	< N x 1Hz

2. 2. Amplitude Specifications

2. 2. 1. Output Power Level (for full frequency range)

23℃±5℃

Model	Standard	With Programmable Step Attenuator (Option 001)
S1101A	-20dBm - +7dBm	-120dBm - +7dBm (settable to -135dBm)
S1101B	-20dBm - +7dBm	-120dBm - +7dBm (settable to -135dBm)

2. 2. 2. Output Power Accuracy

- With Attenuator (Option 001)

	Output Power	Uncertainty
Output Power Accuracy (23±5℃)	-10dBm - +7dBm	±0.8dB
	-60dBm - -10dBm	±1.0dB
	-90dBm - -60dBm	±1.5dB (Typ.)
	-120dBm - -90dBm	±3.0dB (Typ.)

- Without Attenuator

	Output Power	Uncertainty
Output Power Accuracy (23±5℃)	-10dBm - +7dBm	±0.8dB
	-20dBm - -10dBm	±1.0dB (Typ.)

2. 2. 3. SWR (0dB Attenuatior)

SWR	<1.8:1

2. 3. Signal Purity Specifications

2. 3. 1. Harmonics

Harmonics	Sub-Harmonics	Non-Harmonics (1KHz offset)
<-30dBc	-	<-62dBc

2. 3. 2. SSB Phase Noise

Frequency	Frequency Offset			
	100Hz	1kHz	10kHz	100kHz
250kHz - 250MHz	<-91dBc/Hz	<-107dBc/Hz	<-125dBc/Hz	<-127dBc/Hz
250MHz - 500MHz	<-97dBc/Hz	<-121dBc/Hz	<-129dBc/Hz	<-133dBc/Hz
500MHz - 1GHz	<-91dBc/Hz	<-115dBc/Hz	<-127dBc/Hz	<-127dBc/Hz
1GHz - 2GHz	<-85dBc/Hz	<-110dBc/Hz	<-121dBc/Hz	<-121dBc/Hz
2GHz - 3GHz	<-81dBc/Hz	<-106dBc/Hz	<-117dBc/Hz	<-117dBc/Hz
3GHz - 6GHz	<-75dBc/Hz	<-100dBc/Hz	<-111dBc/Hz	<-111dBc/Hz

2. 4. Modulation Specifications

2. 4. 1. Modulation Signal Generator

- **AM,FM,PM Modulating Signal**

Modulation Type	amplitude modulation, frequency modulation, phase modulation	
Waveform	Sine, square, triangle, ramp, noise, double sine, swept sine	
Frequency Range	Sine wave, double sine, swept sine:	1Hz - 1MHz
	Square, triangle wave, sawtooth	1Hz - 100KHz
Frequency Resolution	1Hz	
Pulse Modulation	Pulse width	20ns - (42s-10ns)
	Pulse cycle	100ns - 42s,
	Resolution	10ns

- **Pulse Modulating Signal**

Pulse Width	40ns - (42s-20ns)
Pulse period	100ns - 42s
Resolution	20ns

- **Base band signal Generator (Option 002, 003)**

Modulation Type	BPSK,QPSK,0QPSK,8PSK,MSK,2FSK,16QAM	
Symbol Rate	BPSK, QPSK, 0QPSK, 8PSK, 16QAM	10ksps - 10Msps
	MSK, 2FSK	10ksps - 2Msps
DAC Resolution	16bit DAC	
Filter Parameter	Nyquist	0.20≤ α ≤0.80
	Gaussian	0.20≤BT≤0.80

2. 4. 2. Amplitude Modulation Specifications

100MHz<CF≤6GHz	Max. Modulation depth	90%
	AM width	(3dB, 30%modulation depth):DC - 100kHz
	AM Accuracy	<±(6%*Modulation depth + 1%) (1KHz Modulation Rate, 300Hz~3KHz Demodulation bandwidth, modulation depth <90%)
	AM distortion	<1.5% (1KHz Modulation Rate, 30%modulation depth)

2. 4. 3. Frequency Modulation

Max. Frequency Deviation	N x 1MHz (Typ.)
Modulation Rate (3dB bandwidth, 100kHz deviation)	Internal DC: DC - 100kHz
	Internal AC: 100kHz - 1MHz
	External DC: DC - 100kHz
	External AC: 100kHz - 10MHz
Accuracy **(1KHz rate, 300Hz~3KHz Demodulation bandwidth, deviation<N×100KHz,residual FM removed)**	±（5%×deviation＋20Hz）
Distortion **(1KHz rate,100kHz deviation)**	<1%

2. 4. 4. Phase Modulation

Max. Phase Deviation	Modulation Bandwidth 100kHz:	N × 10rad (Typ.)
	Modulation Bandwidth 1MHz	N x 1rad
Modulation rate (3dB bandwidth, 5rad deviation)	Modulation Bandwidth 100kHz:	DC - 100kHz
	Modulation Bandwidth 1MHz	100kHz~1MHz (Typ.)
Accuracy (1KHz rate, 300Hz ~ 3kHz demodulation bandwidth, deviation <N × 10rad)		<± (5% × offset + 0.01rad)
Modulation Distortion (1kHz rate, 5 rad deviation)		<1%

2. 4. 5. Pulse Modulation

Pulse on/ off ratio		>60dB
Pulse modulation rise/fall time		<150ns
Pulse repetition frequency		0Hz-10MHz
Pulse repetition frequency	ALC on	20Hz - 100kHz
	ALC off	DC - 1MHz
Min Pulse Width (ALC on)		0.2us

2. 4. 6. Vector Modulation (Option 002, 003) CF>100MHz

Operation Mode	External I/Q input	
Input Port	BNC (female) 50ohm	
Modulating Frequency Range (typ. 3dB)	DC - 10MHz	
Accuracy typ. (4Msps, QPSK , Nyquist filter, α =0.3)	EVM (rms)	<3%
	Amplitude error (rms)	<3%
	Phase Error	<2% (100MHz -3.2GHz) <3% (3.2GHz - 6GHz)

2. 5. Interfaces

2. 5. 1. Front Panel

- RF Output Port

S1101A	S1101B
N type (F)	N type (F)

- Other Ports

Description	Interface Type
External modulation signal input	BNC (F) 50ohm
Low frequency Output	BNC (F), output frequency 0.01Hz -1MHz, 40mVp - 4Vp
Pulse signal input	BNC (F) 2kohm
Pulse monitor signal output	BNC (F),50ohm
Pulse sync signal output	BNC (F),50ohm
USB port (for data record, software upgrade only)	USB 2.0
I Input	BNC (F),50ohm
Q input	BNC (F),50ohm

2. 5. 2. Rear Panel

- **Telecommunication Ports**

LAN (10base-T RJ45)	Remote control, software upgrade
RS-232	External Monitor
GPIB	Remote Control

- **Other Ports**

Description	Interface Type
Stop sweep input/output	BNC (F) .damage level >5.5V, <-0.5V
External detection input	BNC (F), 1kohm, damage level >15V, <-15V
Trigger In	BNC (F), damage level >5.5V, <-0.5V
Trigger Out	BNC (F)
10MHz In	BNC (F), 50ohm, input signal frequency 10MHz ± 100Hz, 0 - 10dBm Damage Level >10V, <-5V
10MHz Out	BNC (F), 50ohm, signal level 0dBm ± 3dBm
Sweep Output	BNC (F), 0V - 10V
Z-axis blank/frequency marker Output	BNC (F)
/I signal Output	BNC (F), 50ohm
/Q signal Output	BNC (F), 50ohm
I signal Input	BNC (F), 50ohm
Q signal Input	BNC (F), 50ohm

2. 6. General

Screen	TFT-LCD
Dimension	426×133×510mm（without handles,feet）
	Standard Pack: 482×152×582mm（with handles,feet）
Weight	23kg
Operating Temperature	0- +40℃
Storage Temperature	-40℃ - +70℃
Temperature Stability	0.02dB/℃ @ 250kHz -3.2GHz 0.01dB/℃ @3.2GHz - 67GHz
Max.Power	300W
Power Supply	220V(±10%), 50Hz (±5%) AC

2. 7. Compliant

2. 7. 1. CE

- EMC

Complies with the requirements of the **EC EMC directive 2014/30/EU** with amendments.

Test Standards:

EN 61326-1:2013

EN 61000-3-2:2014

EN 61000-3-3:2013

- Safety

Complies with **EC LVD Directive 2014/35/EU** with amendment.

Test Standard

EN61010-1:2010

2. 7. 2. ISO

- Manufacturing

This instrument is manufactured in an ISO-9001 registered facility

- End of Document -